Tips & Tricks for Building **Better Drawers — Guaranteed!**

Tough Cuts Made Easy — Multipurpose Table Saw Jig

Woodsmith®

Woodsmith.com

Vol. 33 / No. 196

INSIDE:

Building Flawless Projects: Details that Make a Difference

Making the Case for **Low-Cost Lumber**

Our Secret for Cutting Perfect Curves

Easy-to-Build CABINET for Storage & Display

A Publication of August Home Publishing

Table of Contents

from our readers
Tips & Techniques 4

all about
Cabinet Lighting 8
Find out what you need to know to select the right style of lighting for your next project.

tools of the trade
Hand Drills 10
Every shop needs a drill. Here's what to consider when choosing one for your shop.

jigs and fixtures
Tapering Jig. 12
This versatile jig makes tough table saw cuts a lot quicker, easier, and safer.

woodworking technique
Woodsmith GO ONLINE EXTRAS
Veneering Large Panels 14
Learn the simple secrets to successfully veneering large surfaces.

tips from our shop
Shop Notebook 32

techniques from our shop
Building Better Drawers. 42
Smooth-working drawers don't happen by accident. Make it a sure thing every time.

working with tools
Perfect Band Saw Cuts 44
We share some helpful tips for making dead-on, freehand cuts at the band saw.

finishing room
Finishing Poplar 46
We'll show you how the right finish can make this low-cost wood look like a million bucks.

details of craftsmanship
Setting Construction Goals 48
Paying attention to the right details is all it takes to build a great-looking project.

in the mailbox
Q & A 50

hardware and supplies
Sources 51

Curved-Handle Tray page 18

Veneered Credenza page 22

projects

weekend project

Curved-Handle Serving Tray 18

Round up some of those special scraps you've been saving and pencil in this eye-catching project for your next open weekend.

designer series project

Veneered Credenza 22

The "retro" styling of this handsome project is a nod to the not-too-distant past. It's a great opportunity to try something a little different.

heirloom project

Curio Cabinet 34

If you're a collector, this is a project you won't want to pass up — practical, attractive, and guaranteed to be an enjoyable shop experience.

Curio Cabinet page 34

editor's note
Sawdust

My request for comments and suggestions on improving *Woodsmith* generated a lot of compliments, some great ideas, and few suggestions for improvement. I've read them all and I'm working to get back in touch with each of you. While I can't guarantee we'll be able to do everything that was suggested, we'll give it all serious consideration.

On to what really matters at this point — the issue that you hold in your hands. Inside, you'll find some great projects along with a couple of "back to basics" articles that I think are well worth perusing and are sure to improve your skills.

If you're looking for a great weekend project, check out the curved-handle serving tray on page 18. Matching the curved handle with the ends of the tray provides a nice woodworking challenge. And selecting a pair of contrasting and highly figured materials is the perfect way to create an eye-catching look.

When it comes to featuring a treasured collection, you can't go wrong with the curio cabinet shown on page 34. The glass doors and slanted sides of the cabinet provide a great view of any collection from any angle. And the simple moldings at the top and bottom of the cabinet give it a traditional look without a lot of time-consuming effort.

To round out the projects, there's an attractive, veneered credenza (page 22). It's designed in a style that's making a resurgence in some areas. Even if you don't build it, there's a lot of great information on large case construction and veneering that you can apply to any style of project you build down the road.

Finally, the article starting on page 48 about setting construction goals is a must-read. Regardless of what you're building, you'll find valuable nuggets of woodworking wisdom gained from years of experience.

Bryan

Woodsmith GO ONLINE EXTRAS

This symbol lets you know there's more information online at www.Woodsmith.com. There you'll see step-by-step videos, technique and project animation, bonus cutting diagrams, and a lot more.

Tips & Techniques

Handy Tool Stand

My collection of pliers was just thrown into one drawer with the idea that I'd build some suitable storage "some day." I finally grew tired of rummaging through my tool drawer every time I needed a pair of pliers.

The storage solution I came up with is shown in the photo and drawings. It's just an L-shaped stand with a slotted rack at the top to hold the tools. The rack is tapered so the pliers stay put. I made the base extra wide so it could stand on the workbench.

To build the stand, I cut the base and back to size first. Then I added a rabbet to the base and glued the two parts together.

Next, I built the rack assembly. Since the grooves in the front and back of the rack need to align, I cut them in an extra-wide blank first. After I ripped it in half, I cut the bevels on the rack front. To finish up, I cut hardboard dividers to size and glued up the assembly. A couple of screws through the back hold the rack on the stand. I added L-hooks so it could hand on pegboard. The base of the rack allows me to take it with me in my shop.

With this new caddy, my pliers are always right at hand.

Bob Zimmerman
Des Moines, Iowa

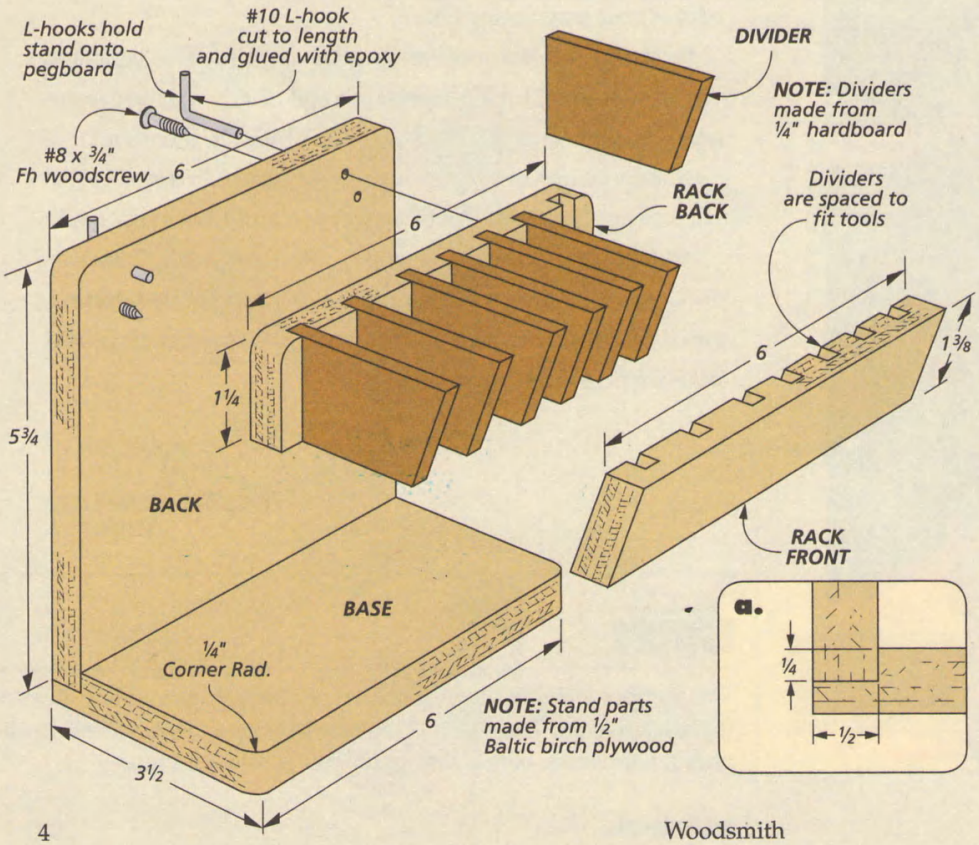

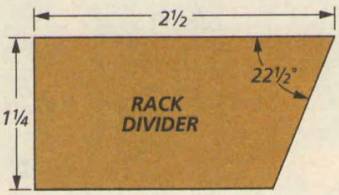

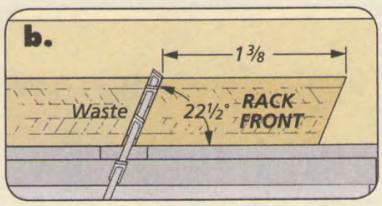

Change a Sanding Disk

Changing the disk on a disk sander is always a chore. You usually need to remove the table to have complete access to the plate in order to apply the new sanding disk. But I figured out a way to change the sanding disk without taking the table off.

First, I peel about half the backing off the disk and fold it down, as you can see in the top photo. Next, I slip the covered half behind the table and align the portion with the adhesive exposed with the plate. Finally, I turn the disk by hand 180° and remove the rest of the backing (lower photo).

The disk slips right into place without removing the table. I get the job done in a fraction of the time.

Chris Forgacs
Ravenna, Ohio

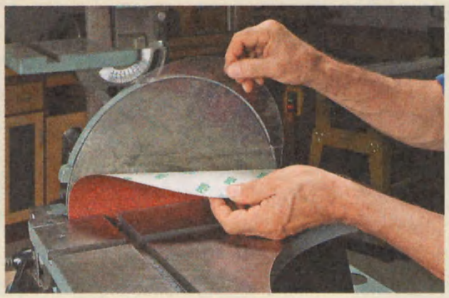

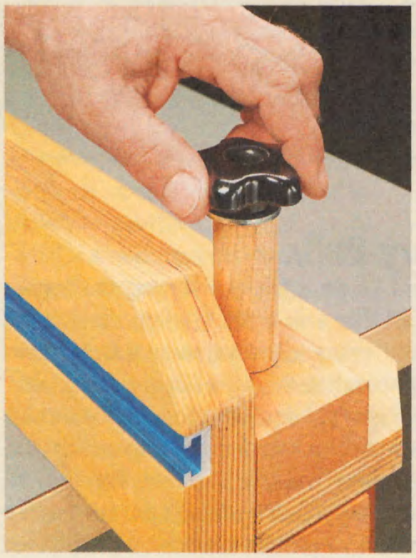

Dowel Extensions

I have a great router table that does everything I need it to do, until it's time to change the position of the fence. The bolts to loosen the fence are short and the knobs are close to the fence, making it almost impossible to turn them.

I remedied this problem with extensions made from 1"-dia. dowels about 4" long. First, I drilled a hole through the center of each dowel. Then I exchanged the bolts for longer ones. When I slipped the dowel over the bolt, it raised the knobs above the fence. Now it provides plenty of room for my fingers.

Bill Huber
Haslet, Texas

SUBMIT YOUR TIPS ONLINE

If you have an original shop tip, we would like to hear from you and consider publishing your tip in one or more of our publications. Go to:

Woodsmith.com
Click on the link,
"SUBMIT A TIP"

You'll be able to tell us all about your tip and upload your photos and drawings. You can also mail your tips to *"Woodsmith Tips"* at the editorial address shown at right. We will pay up to $200 if we publish your tip.

FREE TIPS BY EMAIL

Now you can have the best, time-saving secrets, solutions, and techniques sent directly to your email inbox. Just go to **Woodsmith.com** and click on ***"Sign Up for Free E-Tips."*** You'll receive one of our favorite tips each week.

Woodsmith®

No. 196 August/September 2011

PUBLISHER Donald B. Peschke

EDITOR Bryan Nelson
MANAGING EDITOR Vincent Ancona
SENIOR EDITOR Ted Raife
ASSOCIATE EDITOR Dennis Perkins
ASSISTANT EDITOR Carol Beronich
CONTRIBUTING EDITORS Phil Huber, Randall A. Maxey, James Bruton
EDITORIAL INTERN Abby Wolner

EXECUTIVE ART DIRECTOR Todd Lambirth
SENIOR ILLUSTRATORS David Kreyling, Harlan V. Clark, David Kallemyn
SENIOR GRAPHIC DESIGNER Bob Zimmerman
GRAPHIC DESIGNER Shelley Cronin
GRAPHIC DESIGN INTERN Becky Kralicek
CONTRIBUTING ILLUSTRATORS Dirk Ver Steeg, Peter J. Larson, Erich Lage

CREATIVE DIRECTOR Ted Kralicek
SENIOR PROJECT DESIGNERS Ken Munkel, Kent Welsh, Chris Fitch, Jim Downing, Mike Donovan
PROJECT DESIGNER/BUILDER John Doyle
SHOP CRAFTSMEN Steve Curtis, Steve Johnson
SENIOR PHOTOGRAPHERS Crayola England, Dennis Kennedy
ASSOCIATE STYLE DIRECTOR Rebecca Cunningham
SENIOR ELECTRONIC IMAGE SPECIALIST Allan Ruhnke
PRODUCTION ASSISTANT Minniette Johnson
VIDEO EDITOR/DIRECTOR Mark Hayes, Nate Gruca

Woodsmith® (ISSN 0164-4114) is published bimonthly by August Home Publishing Company, 2200 Grand Ave, Des Moines, IA 50312.

Woodsmith® is a registered trademark of August Home Publishing.
Copyright© 2011 August Home Publishing Company. All rights reserved.

Subscriptions: Single copy: $4.95.
Canadian Subscriptions: Canada Post Agreement No. 40038201. Send change of address information to PO Box 881, Station Main, Markham, ON L3P 8M6. Canada BN 84597 5473 RT
Periodicals Postage Paid at Des Moines, IA, and at additional offices.
Postmaster: Send change of address to *Woodsmith*, Box 37106, Boone, IA 50037-0106.

WoodsmithCustomerService.com

ONLINE SUBSCRIBER SERVICES

- **VIEW** your account information
- **RENEW** your subscription
- **CHECK** on a subscription payment
- **PAY** your bill
- **CHANGE** your mailing or e-mail address
- **VIEW/RENEW** your gift subscriptions
- **TELL US** if you've missed an issue

CUSTOMER SERVICE Phone: 800-333-5075

SUBSCRIPTIONS
Customer Service
P.O. Box 842
Des Moines, IA 50304-9961
subscriptions@augusthome.com

EDITORIAL
Woodsmith Magazine
2200 Grand Avenue
Des Moines, IA 50312
woodsmith@woodsmith.com

AUGUST HOME PUBLISHING COMPANY

Printed in U.S.A.

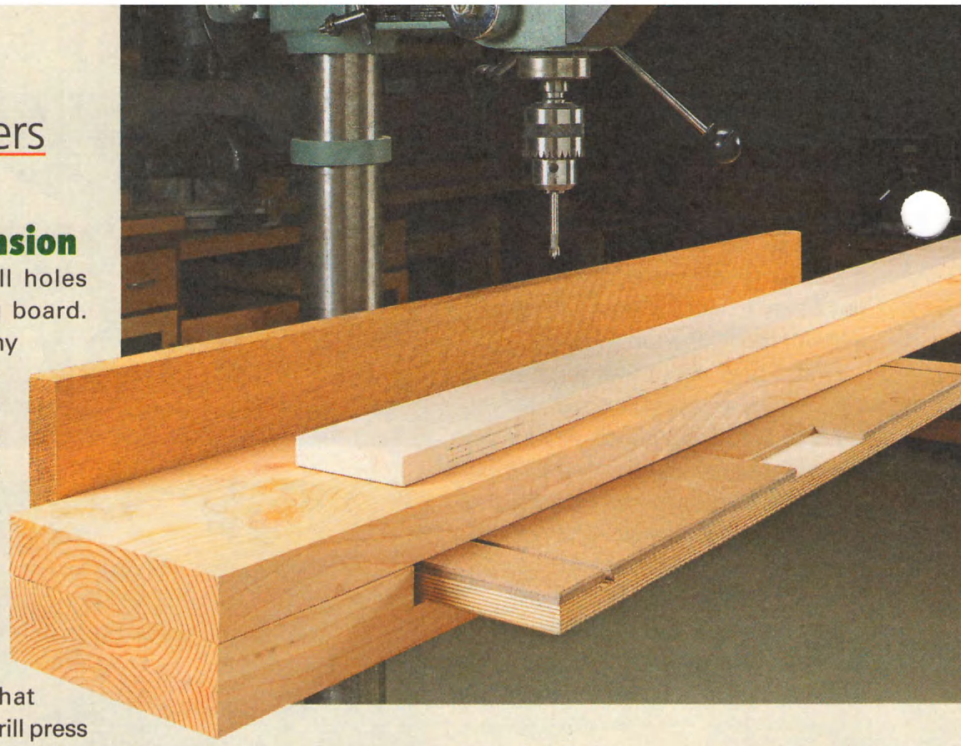

Drill Press Extension

I find it difficult to drill holes near the end of a long board. The board teeters on my small drill press table and I spend a lot of time trying to line up the bit before I even start the drill. So I built the auxiliary table you see in the photo.

It's just three pieces of lumber sandwiched together to make a long extension table that hooks over my existing drill press table. You can see how it works in the right drawing.

The key to this extension is the spacer between the support board on top and the hook board on the bottom. I planed a board for the spacer to the same thickness as my auxiliary table. This eliminates any play when I attach the extension table. It just slides into place and stays put. And when I don't need it, the low-profile design makes it easy to store out of the way.

Ian Ross
Smith Falls, Ontario

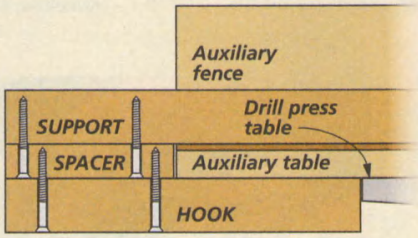

Temporary Pulls

Fitting drawers for a project is always a challenge. It takes a lot of trial and error (pulling drawers in and out of their openings many times) before I'm satisfied with how they fit in the case.

The problem is that I don't like to install the pulls until I'm sure the fit of the drawer is exactly right. That way I can align the pulls perfectly. But removing a drawer without a pull is difficult. So I use small pieces of duct tape as temporary drawer pulls. Now the drawers slide out easily.

Ken Munkel
Des Moines, Iowa

Disposable Glue Tray

When I glue up an assembly, I like to pour the glue in a tray so that I have easy access to brush it on joints. I've used all sorts of trays for this purpose, but found the cut off bottom of a windshield washer fluid container to be the best.

It's a great way to recycle a throw-away container. Plus, wood glue doesn't stick to this type of plastic. When I'm finished with the job, I can just pull the glue off after it dries, like you see in the photo. And it's ready to reuse again and again.

Charles Mak
Calgery, Alberta

Glue Bottle Tip

No matter how careful I am, my glue bottle always seem to clog up after just a few uses. Rather than continually cleaning the nozzle and tip, I designed a better dispenser bottle.

First, I removed the stopper and nozzle from the glue bottle and made the opening slightly larger. Then I slid the nozzle from a tube of latex caulk over the stub. It's a perfect fit and the larger hole lets the unused glue run back to the bottle.

Dustin Hopper
Marshfield, Missouri

Inexpensive Remote

A remote control offers a handy way to turn on a shop vacuum when I need to collect dust from a routing or sanding job, since the vacuum is usually located in an out-of-the-way spot with the switch out of reach. But a remote control designed for workshop tools is relatively expensive. I found a cheaper alternative, though.

I use a remote control that's designed for outdoor lights. The two-piece remote, like the one shown in the photo, is available in the lighting department at most hardware stores or home centers. The amperage rating is high enough to run a shop vacuum without overloading the circuit. But the best part of using this remote is it costs about a third of the price of a shop remote.

Loren Apfel
Norfolk, Nebraska

Keep remote in shop apron

Plug shop vacuum into wall unit

Win This Bosch Impact Driver

That's right, send us your favorite shop tips. If your tip or technique is selected as the featured reader's tip, you'll win a *Bosch* impact driver just like the one shown here. To submit your tip or technique, just go online to *woodsmith.com* and click on the link, "SUBMIT A TIP." You can submit your tip and upload your photos for consideration.

The Winner!

Congratulations to Ian Ross, winner of the *Bosch* impact driver. To find out how you could win this driver, check out the information on the left.

Quick Tips

PLASTIC DOWELS

When I'm painting or finishing a project in my shop, I use props to keep the project off the bench. But I seldom use wooden dowels. Instead, I use "dowels" cut from plastic coat hangers. The plastic cuts just like wood, but the finish won't stick to it. This makes cleanup a breeze.

Steve Fox
Gilberts, Illinois

REINFORCED SANDPAPER

When sanding with a finish sander, it's easy to wear through the sandpaper along the edges and corners where the paper gets the most friction. Often this happens before the sandpaper is used up, causing waste, lost time, and frustration. But I've found a quick, easy fix.

I apply duct tape to the back of the sandpaper. The duct tape reinforces the sandpaper against wear and tear so I get longer use out of it.

Jared Beck
Pocatello, Idaho

SHORTEN PIN NAILS

I needed 1½" pin nails to complete a project. But I only had 2" nails on hand.

Rather than make another run to the store, I simply snipped off the end of the 2" nails with a pair of tin snips. To sharpen the new ends, I held the strip of nails between scrap blocks of wood and reground them on my bench grinder. The shorter nails worked great in my pin nailer.

Serge Duclos
Delson, Quebec

choosing Cabinet Lighting

Installing the right lighting is the key to highlighting your treasures.

▼ Different types of bulbs emit light within a certain range of the color spectrum, either cool or warm.

Adding interior lighting to a display cabinet is a great finishing touch. It draws attention to the project and the items on display. The only problem: There are a lot of choices. With so many options, it's easy to get overwhelmed.

Choosing the best lighting for a cabinet or shelf is easiest if you consider just two aspects: the source and the fixture. By the source I mean incandescent or fluorescent, among others. Knowing how these types of lights work helps narrow down the choice. Then you can decide on the type of fixture. Puck, strips, and canisters are a few of the choices.

LIGHT SOURCE

Only a few years ago there were just two choices for lighting: incandescent and fluorescent. But today there are almost as many light sources as there are fixtures.

INCANDESCENT. An incandescent light is the oldest, most common type of lighting available. Although the warm yellow glow is not quite as bright as other types of lighting, it's inexpensive. It's biggest drawback is that it produces a lot of heat. If you want to use it in an enclosed cabinet, it needs ventilation.

FLUORESCENT. Fluorescent light is at the opposite end of the color spectrum from incandescent. It casts a blue-violet glow. Because of how light is produced in the tube, it will take less wattage to produce the same amount of brightness as an incandescent bulb. That makes it more efficient to operate. The violet color of the light has a tendency to distort the color of objects, but you can find warm fluorescent light bulbs that are more natural looking and don't cast violet light.

Another design using the same technology is a compact fluorescent bulb. Most bulbs are made to fit in an incandescent light fixture, replacing incandescent bulbs to help reduce heat build up.

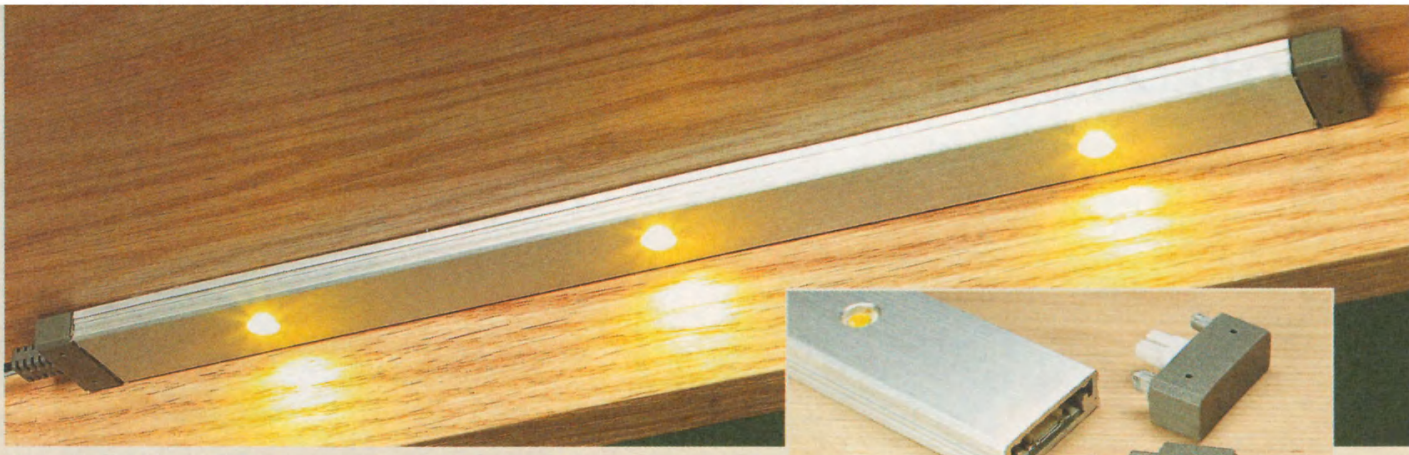

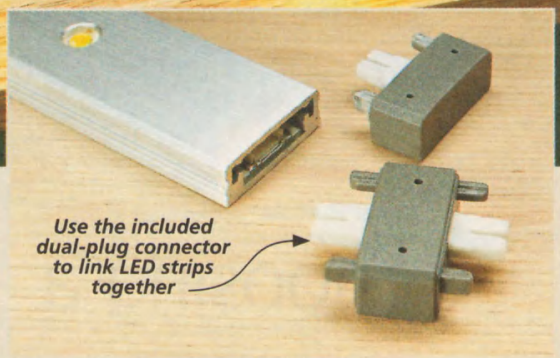

▲ Low profile LED strips can be linked together with special connectors (inset photo) and are easy to install in a cabinet.

LIGHT EMITTING DIODES. If you want high-intensity light, then light-emitting diodes (LED) are the best choice. They're really tiny lights clustered together to make one bright light. These lights are lower in energy consumption and last longer than incandescent lighting. There are disadvantages to this light, though. They're expensive (about $20 per bulb) and their blue tint doesn't give the best color rendition.

HALOGEN LIGHTING. Another high-intensity option for lighting is halogen lights. Some of these lights are designed to fit incandescent fixtures, so you can get whiter light. They're more efficient to use and last longer than ordinary incandescent bulbs. They do burn hotter, so they need ventilation too.

XENON. Xenon lights may be the best choice of all. They burn cooler and still give off bright white light that mimic natural daylight. Often this is the best option when true color is important. The downside to xenon lights is that they're expensive (about $20 for a bulb).

FIXTURES

There are a wide variety of cabinet fixtures, but the size and shape of the fixture and where it needs to be located for optimal lighting may dictate which is best for a particular project.

CANISTER LIGHTS. An early popular shape of light was the canister light (lower left photo). Canister lights, which house incandescent, compact fluorescent, or halogen bulbs, shine light directly down. Some fixtures have the option to move side-to-side to a limited extent.

The downside to canister lights is that they have to be vented, so you can only use them in a cabinet that's designed to house the bulky canisters.

▲ Canister lights can create a dramatic effect, but require some clearance to install.

▲ Puck lights can be mounted on the surface of a cabinet or slightly recessed.

PUCK LIGHTING. A good alternative to canister lighting is puck lighting (lower right photo). Puck lights take up the least amount of space in a cabinet because they don't require venting. You can surface-mount them or recess them slightly. Still other puck lights are battery-powered and don't require special installation of any kind.

STRIP LIGHTING. To light multiple shelves with one light you can mount a strip light in the upper inside edge of a cabinet (photo above). This type of fixture comes with LED, fluorescent, or incandescent bulbs.

LINKABLE STRIP LIGHTS. One handy feature of strip lighting to look for is linkable strips. They have either short, pigtail connections or direct connectors, like the ones shown in the inset photo at the top of the page. You can connect multiple lights together to suit your needs for any project.

POWER SUPPLY. Regardless of what type of fixture you decide on, keep in mind that several of the fixtures here require voltage regulators or transformers to supply the correct amount of power. You'll need to consider this when planning for and installing lighting in a project.

Categorizing light sources and fixtures can help you narrow down the options. Then making the right choice will be easy. W

choosing a Hand Drill

Work faster and more efficiently using the right kind of drill for each job in the shop.

A hand-held drill is an essential tool for any woodworking shop. But when you consider the power supply, speed, size and capacity of different drills, finding the right drill for the task at hand might be a tough decision. One way to narrow down the choices is to focus on how the drill is powered: cordless, corded, or pneumatic. Each type of drill is best suited for specific tasks.

CORDLESS. Battery-powered drills are pretty much stantard fair in a woodworking shop. Since there's no cord to get in the way, you can take them anywhere. Newer models are available in a range of sizes and voltages. They're usually light and easy to handle, like the one shown in the top, right photo on the opposite page.

The newer, lithium ion batteries recharge quickly and hold a

▼ Each of these drill types are suited for different types of jobs.

charge for months in storage. This means you don't have to charge the battery before each use, so you can just grab it and go.

Where a cordless drill excels is driving screws. Most drivers have a clutch on the chuck that regulates torque and allows you to drive screws gently without stripping out the holes or screw heads. The clutch actually disengages the chuck so it stops turning even though the motor is still running. Two speed range options also aid in driving screws (right inset photo). I use the slow speed to drive screws and the higher speed to drill small holes.

CORDED DRILLS. Cordless drill/drivers won't do every job, though. They don't have the power to drill large holes or drive long screws into hardwood. For that kind of work, it's best to use a corded drill.

The higher voltage of a corded drill provides more torque for heavy or extended use. For example, if I have a large hole to drill with a hole saw, a corded drill makes short work of it. (The drill shown in the main photo will handle a hole saw up to 1⅜" diameter.)

I also like to use a corded drill for drilling holes for pocket hole joinery. With a corded drill the power never runs out or bogs down, so you can use it for drilling metal or other non-wood materials as well.

▲ The adjustable clutch feature on a cordless drill stops the drill before it strips a screw.

The weight of a corded drill can produce fatigue after prolonged use, though. And no clutch means driving screws takes more finesse.

PNEUMATIC DRILL. One type of power supply that's often overlooked is air. But if you have an air compressor, it's an option worth considering.

Air-powered tools combine the benefits of both the corded and cordless drill. First, they're light weight and easy to handle. Second their power is continuous, if your air compressor is large enough to provide the needed air. The air requirements for most drills are available from the manufacturer, so check the packaging to see if your compressor can handle the task.

▲ Most cordless drills have two speeds: a low speed for driving screws with a light touch and a high speed for drilling (inset photo).

While older air-powered drills only drive forward, newer models have reverse as well, like the one shown in the photo below. You can also vary the speed depending on how hard you pull the trigger. Because they use a common keyed chuck, pneumatic drills take the same bits and attachments as any other drill.

I like to use a pneumatic drill where I have limited clearance. They're great at getting into tight places, because the overall length is much shorter than most other drills. Since a pneumatic drill doesn't have a motor, they usually aren't as large as corded or even cordless drills. You can see what I mean in the lower, right photo on the opposite page.

While you can purchase an air-powered drill for around $35, a high-quality pneumatic drill will set you back about $200. But the tool has few working parts, so it will last virtually forever if kept oiled (left inset photo).

Depending on the type of work you do, you may want to have all three drills on hand in your shop. But if you're just getting started, match the drill to your current need, and you'll get better results with less frustration. W

▲ Pneumatic drills are great for working in tight places. Keep them oiled for years of use.

Rockler Taper Jig

Tapers and straight edges are a lot easier to cut with this handy tool.

I've made a few shop-built tapering jigs, but I have to admit I've never been completely satisfied with the performance of any of them. Either they were built for a specific task, then discarded or they were just a little too hard to set up and use safely. At the end of the day, I found this jig from *Rockler* to be well worth a look. It's not only well made, but super easy to set up and use.

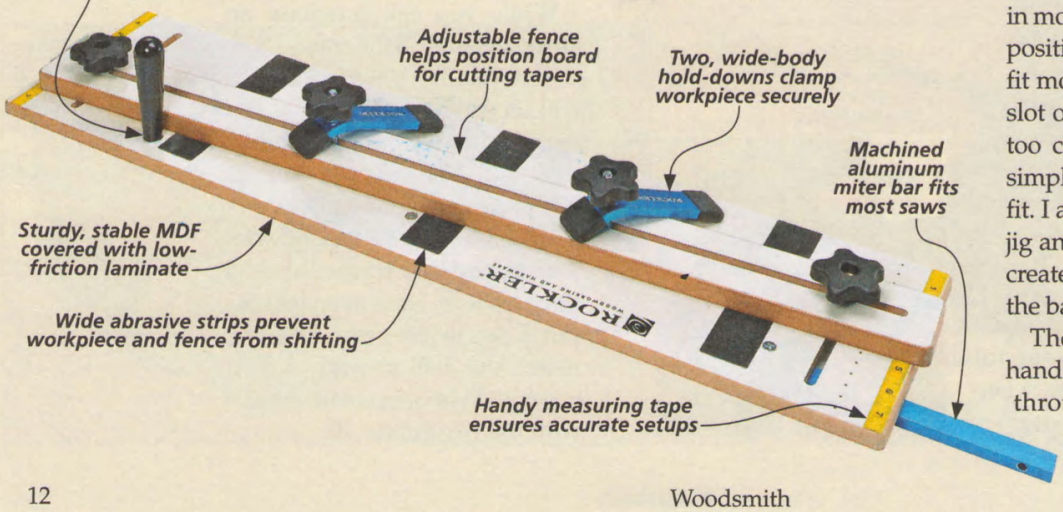

SETUP. Made from flat, stable MDF and covered with low-friction laminate, the jig slides easily over the surface of any table saw. It also has an adjustable miter bar for an accurate fit in most miter slots. There are two positions for mounting the bar to fit most saw models. If the miter slot on your saw brings the base too close to the blade, you can simply trim the base of the jig to fit. I attached the miter bar to the jig and then used it as a guide to create a zero clearance edge on the base of the jig.

The jig also features a large handle for smooth, easy control throughout the cut. Keeping the workpiece on the jig

is a snap with two wide hold-downs. They have non-marring rubber caps for a better grip (lower, center photo). Plus, the jig has three abrasive strips on the base to keep the workpiece from slipping during a cut (lower photo, opposite page).

MULTIPLE USES. The taper jig is designed to cut tapers on boards up to 6" wide. Or you can remove the miter bar and use it to cut a clean, straight edge on any width rough-sawn board (right photo).

TAPERING. The jig has markings for two ways to taper a board. Small holes on each end of the jig are used as indexing marks (left photo, below). Each mark represents one degree of taper. To use the indexing marks, set one end of the fence at the widest point in the taper. Then set the other end to the mark for angle of the taper to cut. With the setup complete, clamp the board against the fence and cut the taper.

DIMENSIONED TAPER. If a project has a dimensioned taper, you can use the measuring tape at each end of the jig to get the perfect setup for a leg or other tapered part. Again you set the lead end of the jig to cut the widest part of the taper. Then set the other end at the narrowest part of the taper. Begin the cut at the wide end of the workpiece for a cleaner cut.

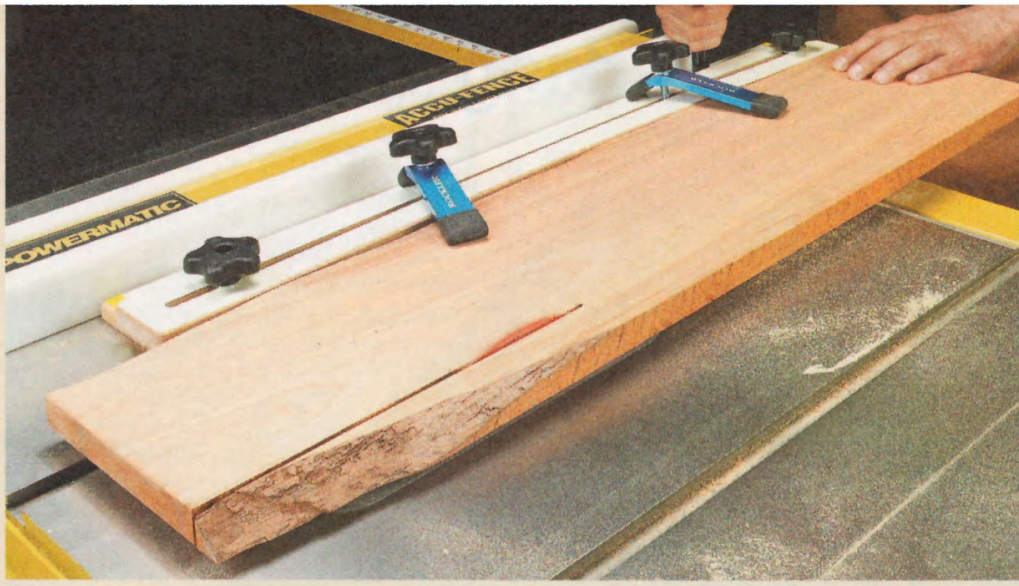

▲ To cut a straight edge on wide boards, simply remove the miter bar from the base and guide the jig against the table saw rip fence. The result is a smooth, straight edge every time.

STOP. There's also a stop at the end of the jig to keep shorter workpieces from sliding backward (right photo, below). The stop can also hold a tapered leg firmly. For a four-sided taper, I save the cut offs and use them to prop the workpiece up for subsequent cuts. The cutoffs ensure a consistent taper on all four edges.

STRAIGHT EDGE. To cut a straight edge on rough lumber, I set the taper fence parallel to the saw blade and clamp the board on the base, as shown in the upper photo. For narrow boards, you can leave the miter bar in place and cut the irregular edge off the board. As I mentioned before, if the board you're cutting is too wide, you can remove the miter bar and use the jig with its edge against your rip fence.

SMALL PIECES. In addition to cutting tapers and trimming edges, this jig can also make cutting small workpieces safer, by holding them in place during a cut.

To sum things up, this jig is smooth, stable, and easy to use. Whether you're cutting tapers on a milled workpiece or cutting the edge off a piece of rough lumber, you'll have a jig that fills the bill. And for under $75, it will work for just about any budget. W

▲ Small holes at both ends of the jig make it easy to set the degree of taper.

▲ Large star-knobs make it easy to tighten the heavy-duty hold-downs.

▲ A handy, retractable stop catches the workpiece at the end of the jig. Slide the stop out of the way to cut longer boards.

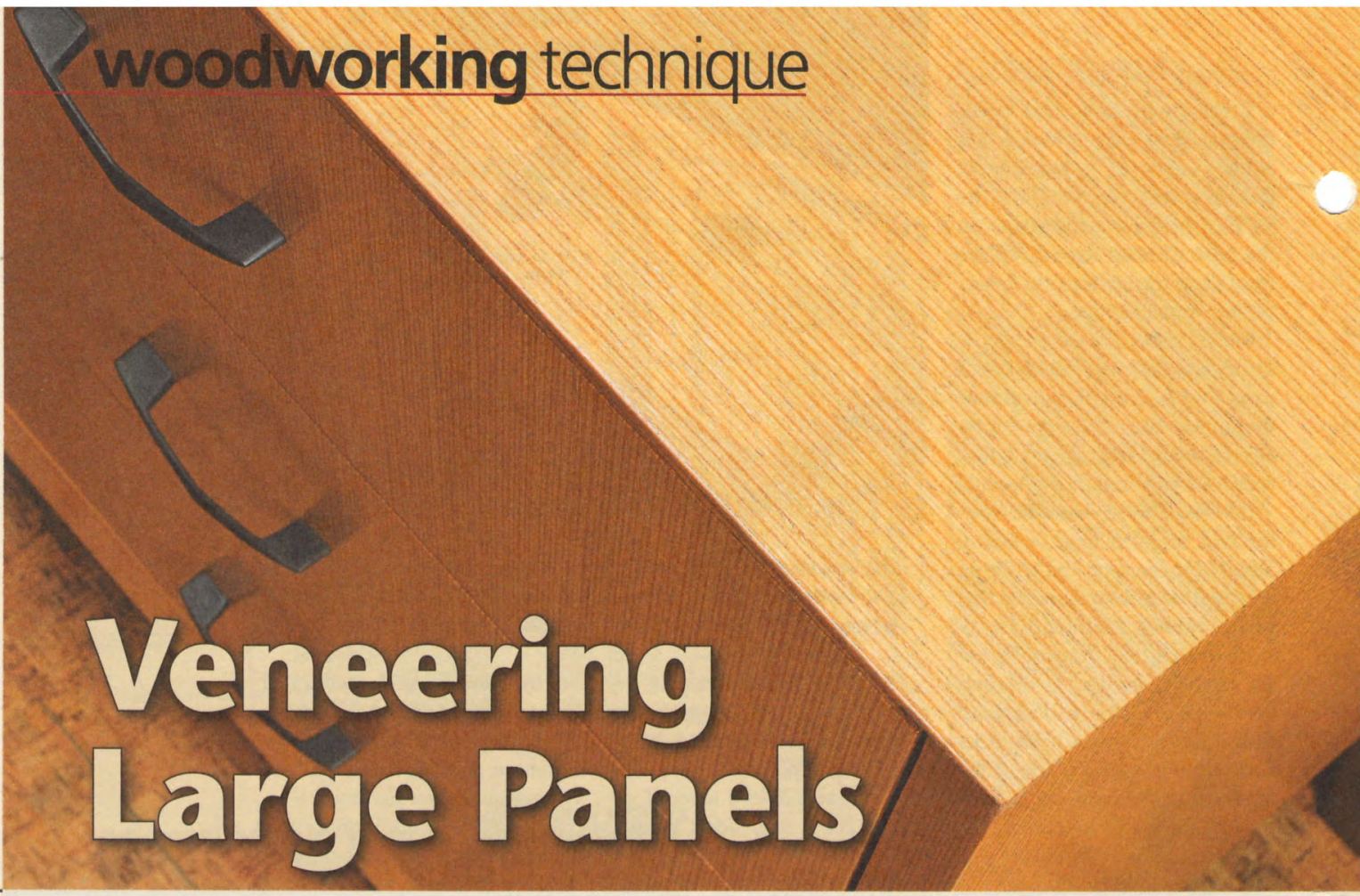

Veneering Large Panels

When applying veneer, careful preparation, a little bit of know-how, and a step-by-step approach guarantee a successful outcome.

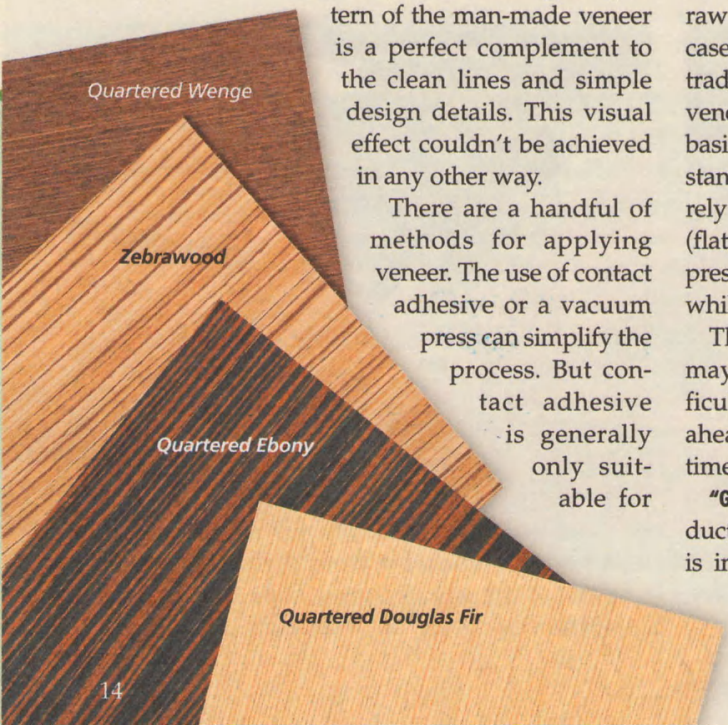

▼ "Green" veneer looks virtually identical to the real thing.

Veneer opens up a lot of design possibilities to woodworkers. The striking appearance of the credenza on page 22 is a great example. The linear grain pattern of the man-made veneer is a perfect complement to the clean lines and simple design details. This visual effect couldn't be achieved in any other way.

There are a handful of methods for applying veneer. The use of contact adhesive or a vacuum press can simplify the process. But contact adhesive is generally only suitable for paper-backed veneer. And due to the high cost, a large vacuum press system isn't a practical investment for occasional use.

CLAMP & CAUL. For applying the raw wood veneer to the large case and panels of the credenza, traditional caul and clamp veneering is a good option. The basic process is easy to understand. In a nutshell, you simply rely on a combination of platens (flat panels), cauls, and clamps to press the veneer onto the panel while the glue sets up.

The sheer size of the project may make this seem like a difficult task. But when you plan ahead and take it one step at a time, it should go smoothly.

"GREEN" VENEER. First, an introduction to the featured material is in order. If you didn't know better, you'd swear the faux vertical grain Douglas fir veneer used on the credenza was the real thing. This unique product is actually reconstituted from wood fibers and then dyed to match a particular species and figure pattern. Several of the available types are shown at left.

This material has several advantages over its natural counterpart. It comes in long, wide, full-yield sheets. The color and grain pattern are consistent within the sheet and from one sheet to the next. Additionally, the cost can be considerably less than natural veneer and it's a good "green" use of a limited resource.

THE TOOLS

Now, let's talk about the tools and supplies you'll need. A good starter set is small and generally inexpensive (top photo, opposite page). Here's a short description of the basic items.

CUTTING VENEER. You'll need something to cut the veneer with. I prefer to use a veneer saw. A veneer saw looks and cuts like a cross between a saw and a knife. The double-sided curved blade has individual teeth like a saw. However, the teeth are sharpened to a single bevel knife edge. A sharp utility knife also works but is more likely to tear or split the veneer, especially when making crossgrain cuts. A veneer saw only runs about $15 — a good investment. You'll also need a straightedge to guide the veneer saw. A three- or four-footer is adequate for most tasks.

VENEER TAPE. Another handy specialty item is veneer tape. It's used to join separate pieces of veneer as well as reinforce fragile veneer and repair cracks or splits.

Veneer tape is simply a very thin, although surprisingly strong, paper tape with hide glue applied to one side. To use veneer tape, you activate the glue by dampening it, then press the tape in place. (The tape is always applied to the outside face.) It can later be sanded or scraped off.

GLUE FOR VENEERING. A variety of glues can be used to lay veneer. However, my first choice is a product that's specifically formulated for this type of veneering. It's referred to as cold press veneer glue. *Titebond* is a commonly available brand.

It comes in liquid form so there's no mixing or heating involved. Its thick consistency minimizes bleed-through. And it dries to a very hard film that eliminates the chance of "creep" between the veneer and substrate.

When working on large panels, you'll need a quick, efficient way to spread the glue evenly over the surface. An inexpensive foam paint roller works great.

CLAMPING PRESSURE. Plenty of evenly distributed clamping pressure is essential to ensure complete adhesion of the veneer. F-style clamps, C-clamps, or handscrews will work well around the edges. However, when working with large panels, applying adequate pressure through the center is a challenge. Deep-throat clamps are one option. As you'll see on the following pages, a cheaper and equally effective solution is to use bowed cauls to transfer clamping pressure applied at the edge to the center of the panel.

▲ A small collection of tools and supplies is all that's required to successfully lay veneer.

GETTING STARTED

With the tools and supplies rounded up, you're ready to go. I'll start by explaining the process of laying veneer on the case. Then we'll talk about the slightly simpler task of completing the doors and drawer fronts.

SMOOTH & FLUSH. The preliminary steps are shown in the photos below. I started with some thorough surface preparation. Any irregularities will telegraph through the thin (1/40") veneer. So you'll need to fill any screw holes and small gaps in the joinery. Make certain the case joints, the beveled trim, and the filled screw holes are sanded perfectly smooth and flush to the surface.

THE VENEER. Your next task is to prepare the veneer. When you cut it to rough size, don't scrimp. I allowed an extra inch or more on all four sides. This makes initial positioning easier and it provides a little insurance if the veneer slips on the glue when clamping pressure is applied.

After cutting the veneer to size, it's a good idea to wrap the ends with veneer tape. This reinforces the veneer against splits.

▲ Apply filler to the screw holes and any other dings or gaps and then sand it smooth.

▲ Working on a sacrificial panel, clamp the straightedge down before cutting the veneer.

▲ To prevent splits from starting, wrap the ends of the cut pieces with veneer tape.

THE CLAMPING SYSTEM

A couple of the preliminary steps are out of the way. But some of the most important preparation is yet to be done. As I mentioned, the success of the job hinges on applying adequate pressure. So the next step is to get your clamping system organized. And then I strongly suggest a thorough dry run before getting out the glue.

CAULS & PLATENS. The veneer is applied to the two sides of the case first, and then the top. The same general setup is used for the different surfaces. I'll use the sides as my example.

To work on the sides, you'll want to stand the case on end, as shown in the drawing at right. It will be easier to position the veneer, cauls, and clamps.

The right drawing and detail show the clamping system I used to press the veneer onto the case. To make certain the veneer laid out flat and to help distribute the clamping pressure evenly, I used two pieces of ¾" MDF as my platen. A third piece of MDF is fit inside the case to balance the pressure. (It can be temporarily attached with double-sided tape.)

I sized the top platens larger than the case sides but slightly smaller than the piece of veneer. This allows you to observe any movement as the clamps are tightened. I also cut a piece of plastic sheeting to place between the veneer and the platens. This eliminates the chance of the veneer and platens sticking together.

As you can see above, I used three pairs of bowed cauls along the side to apply pressure across the platens. (Check out our web site for information on making bowed cauls.) Then I positioned individual clamps between the cauls for added pressure.

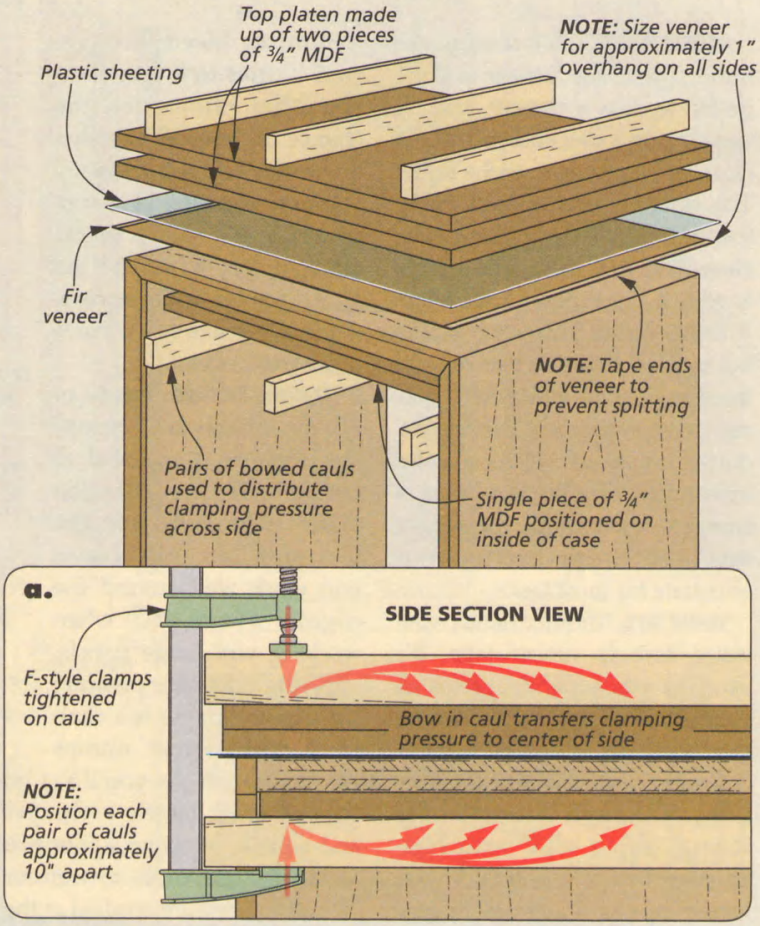

Woodsmith GO ONLINE EXTRAS

To learn how to how to shape bowed cauls, visit our website at Woodsmith.com.

LAYING THE VENEER

With the platens, clamps, and cauls ready, all the other necessary supplies at hand, and the dress rehearsal completed, you can begin laying the veneer. You'll find that once the glue goes on, things can get pretty hectic. And although you can get the job done single-handed, enlisting a helper can reduce the stress.

GLUE ON. The How-To box on the opposite page shows how to proceed. You start by spreading an even coat of glue on the case side. One option is to pour glue into a pan and dip the roller into it. But I think it's easier and faster to pour glue onto the surface and then use the roller to spread it.

A full, wet coat of glue is what you're after — not overly thick and pooling. Once you start applying glue, you have about 15 minutes to get everything in place and the clamps tightened, so you'll have to work quickly.

NEXT, VENEER. With the glue spread on the case side, you can

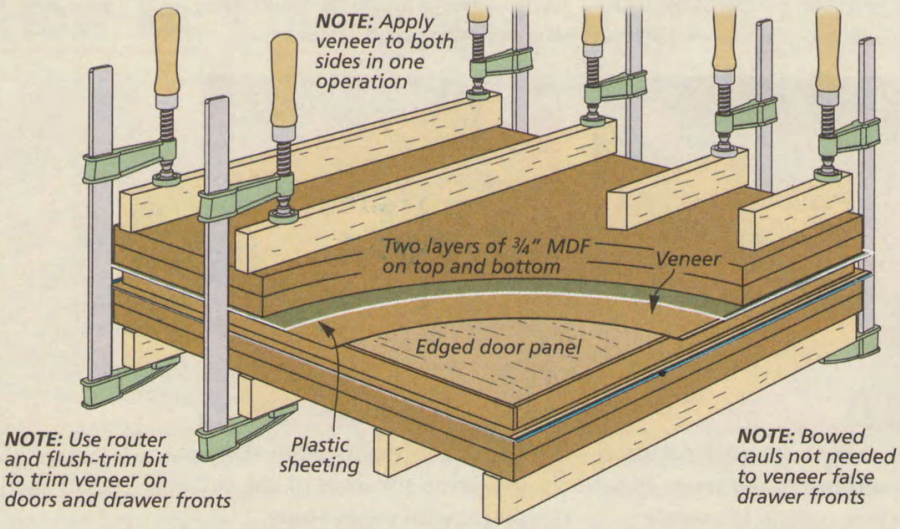

carefully lay the veneer on the panel. The trick here is to position it right on the money with your first try. The glue grabs quickly and if you try to reposition the fragile veneer it will very likely split. This is where having a helper comes in handy.

PRESSURE. Now, quickly smooth the veneer with your hands, lay the sheet of plastic over it, and position the two platens. Take a final look to make sure everything is in order, then start adding the cauls and clamps. To prevent the veneer from shifting, apply pressure gradually by tightening each clamp a little bit at a time. Then you can relax.

CLAMPS OFF. Allow the glue to dry for a couple of hours before removing the clamps. You'll most likely be greeted by a smooth, flat surface. If you have spots of loose veneer or bubbles, check out the box below for an easy fix.

TRIM THE VENEER. Before applying the next piece, I carefully trimmed the veneer flush to the edges. The trick is to avoid lifting or chipping the veneer. Step Four shows how to do the job using a veneer saw. Sanding the edge lightly will complete the job.

Once both sides are veneered, the top piece can be laid. Obviously, you'll need larger platens and more cauls and clamps. I placed a caul about every 10". Step Five shows how to position the large sheet by "rolling" it out from one end to the other.

DOORS & DRAWER FRONTS. The technique used for the doors and drawer fronts is similar. The main difference is that both faces are veneered. And it's best to do this all in one step to avoid bowing the panels. The lower drawing on the opposite page shows how to build the "sandwich" one layer at a time. When veneering the narrower drawer fronts, you can dispense with the bowed cauls. Just use a few more clamps.

I think that when all is said and done, you'll find that the end result is well worth the effort.

How-To: Veneer the Credenza Case

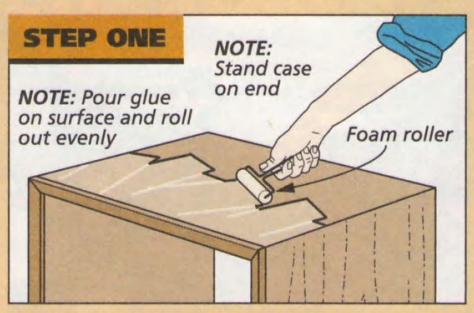

Spread Glue. *Pour glue onto the surface and use the roller to spread it evenly. A full, wet coat will ensure good adhesion.*

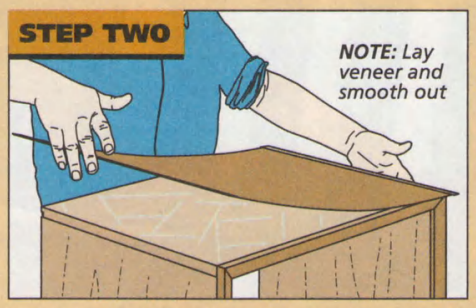

Place Veneer. *Position the veneer carefully on the wet glue and smooth it out. Once laid, don't try to reposition it.*

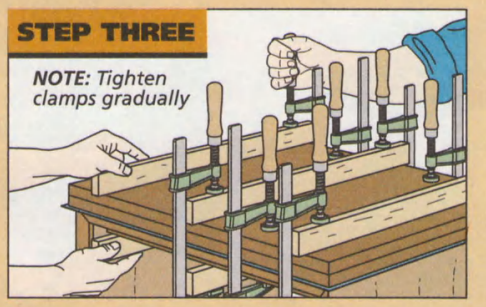

Clamps On. *Now quickly add the platens, cauls, and clamps. Tighten the clamps alternately, gradually increasing the pressure.*

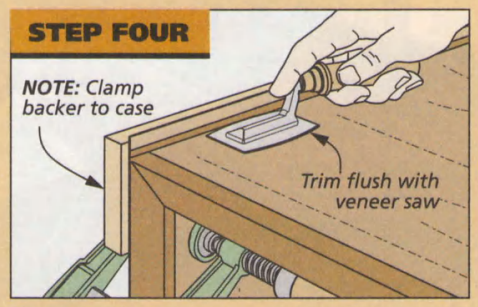

Trim the Veneer. *A board clamped to the outside of the case backs up the veneer while you trim it flush with the veneer saw.*

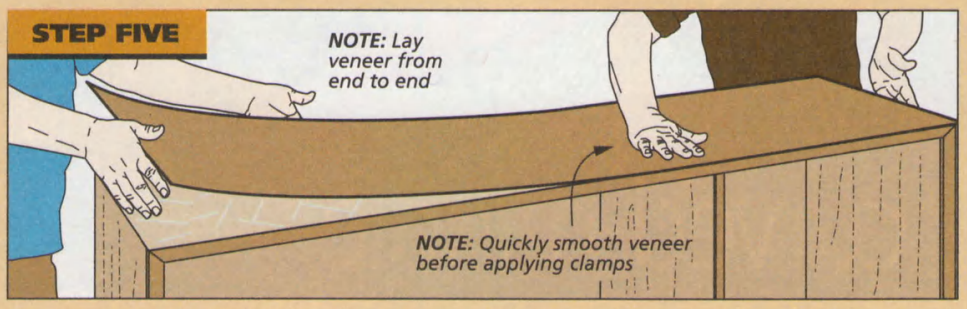

Two-Person Job. *Positioning the long piece of veneer that covers the top of the case is definitely a job for two sets of hands. With one person holding each end, carefully position the veneer on one end and then "roll" it onto the surface. Then repeat the steps above.*

Shop Tip: Iron Out Bubbles

If you find small patches or "bubbles" of veneer that didn't adhere well, don't worry, there's an easy fix. You can iron out the bubbles using heat to reactivate the dried glue.

Set a clothes iron to medium heat. Place a cotton cloth over the spot to be repaired and iron over the area. Check frequently to see when the veneer has flattened out and adhered.

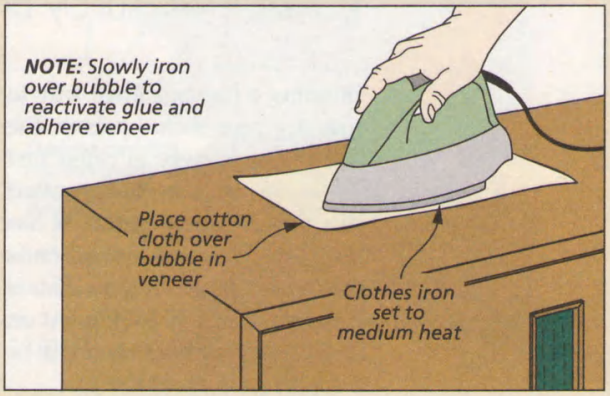

curved-handle Serving Tray

Whether you use this tray to decorate your table or serve your guests, it will surely bring style and grace to your home.

Building a tray is a great way to practice new techniques in the shop. The joinery is often just as unique as the design. And this tray is no exception. It has splayed sides and arched ends that meet curved handles. This is a project that will look great on display in your home and will be a challenge to build too.

The splayed sides are easy to make and require just a couple cuts on the table saw. And the contrasting handles are cut on the band saw from a square blank, so there's no bending involved.

BUILDING THE TRAY

The design of the tray is based around the splay of the sides. The other parts are sized to fit between them. For this reason I started with these.

Your first task is to cut the blanks for the sides. I cut them to length, but left them extra wide.

SPLAY THE SIDES. Cutting the joinery along the bottom edge of the sides is a multi-step process. The key is to create a square reference

face for the bottom of the tray. This is done by making two bevel cuts. In addition, a groove in each side mates with a tongue cut along the edge of the bottom (detail 'a'). The How-to box at the bottom of the page steps you through the process.

To make the first bevel cut, I tilted the saw blade to 22½° and positioned the fence ⅛" from the blade. With the saw set up, you can hold the piece on edge and bevel the inside bottom edge of each side, as shown in the left drawing below.

GROOVE. As I mentioned, a groove in the face of the beveled edge holds a tongue on the bottom. To cut the groove, lay the workpiece flat on the table saw. You'll need to lower the blade to make the groove the proper depth, but leave the angle of the blade the same. The setup is shown in the second drawing from left, in the box below.

BEVEL. The second bevel cut squares up the edge to mate with the bottom. Your goal is to leave a 5/16"-wide beveled face to match the bottom (third drawing below). Then you can trim the sides to width with a 90° cut along the top edge of each side.

NOTCHES. The final step for the sides of the tray is to cut a notch in each end for the handles you'll make later (detail 'b'). I did this with a dado blade in the table saw, standing the workpiece on end (right drawing, below).

After you've cut the notches, take a minute to cut an identical notch in a scrap piece of hardboard. You can use this later to gauge the thickness of the handles, as shown on page 20.

BOTTOM. The tray bottom is simply cut to size from straight-grain lumber. I used straight grain to reduce the chance of it cupping. Then you can rabbet each edge to create tongues (detail 'a').

GLUE UP. At this point, I took the time to glue the sides to the bottom. Clamping the splayed sides is a challenge, so I used tape to hold them in place.

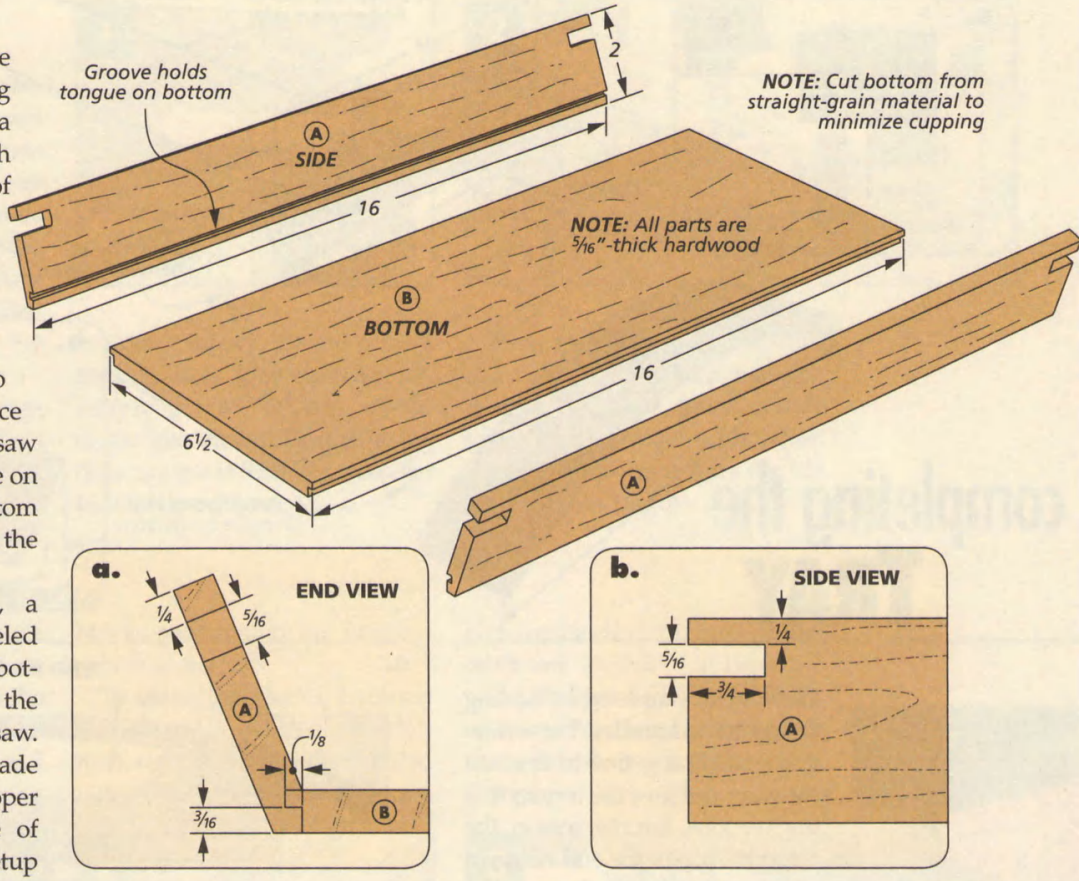

How-To: Make the Tray Sides

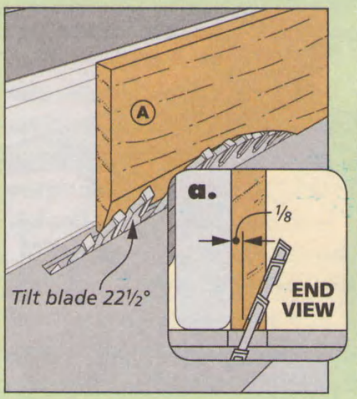

Bevel Edge. *A beveled edge creates a surface to locate the cut for the groove.*

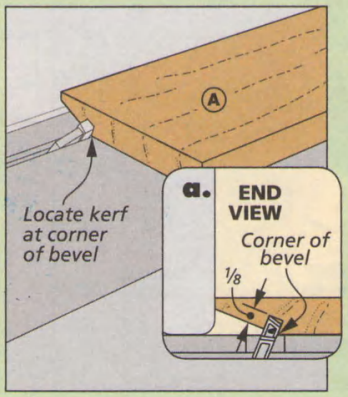

Groove. *A groove cut along the face of the bevel will hold the tongue on the bottom.*

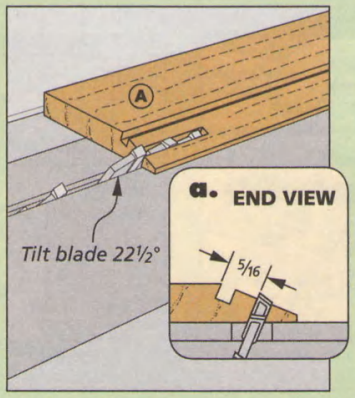

Second Bevel. *A second bevel creates a flat so the tray sides are flush with the bottom.*

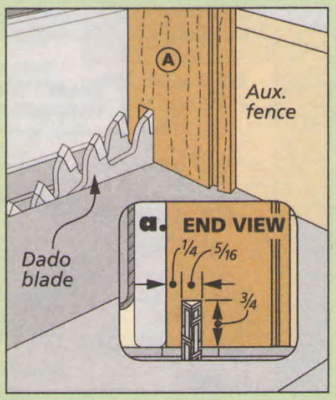

Handle Notch. *Once the sides are cut to width, cut a notch to hold the curved handle.*

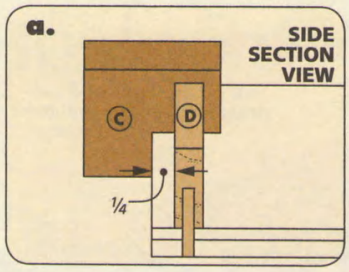

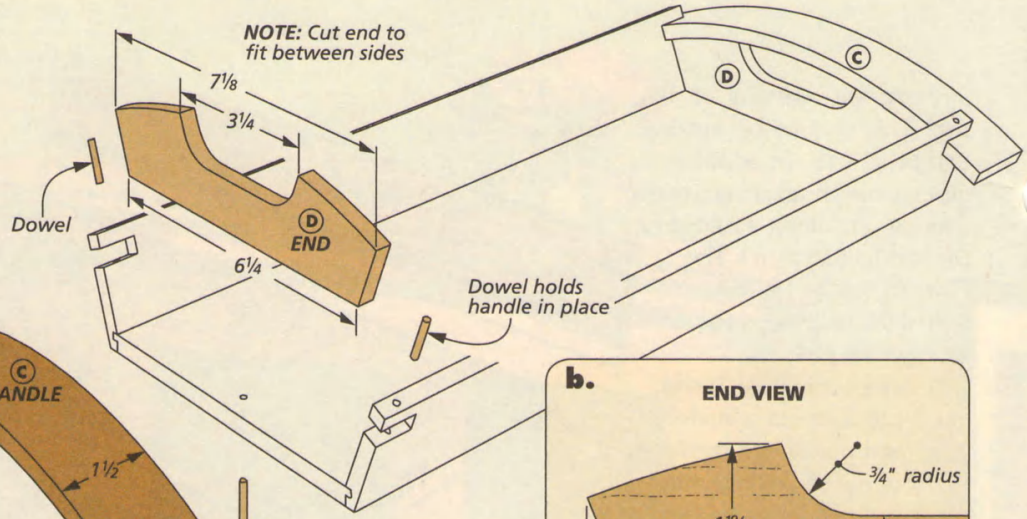

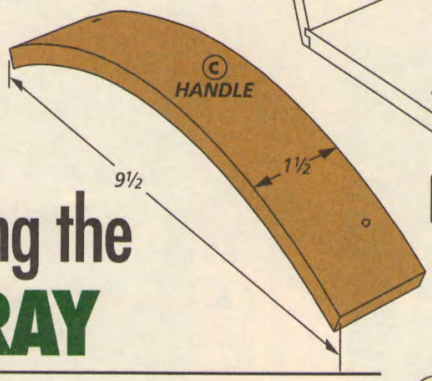

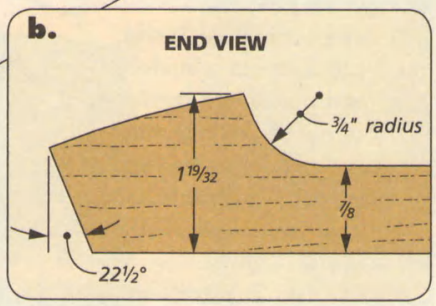

completing the TRAY

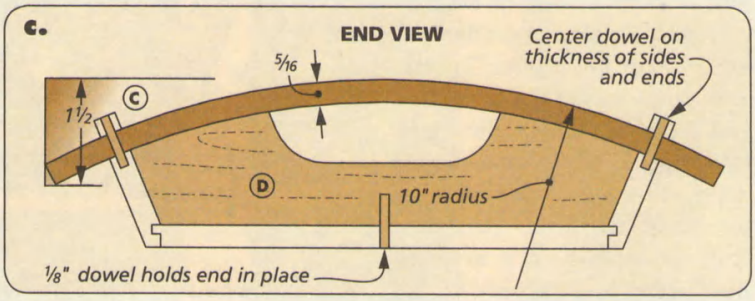

▲ A hardboard gauge will help you check your progress when sanding.

The tray is completed by adding the ends and handles. These integral parts fit together to close up the ends and give the tray its distinctive look. For this reason, the arc at the top of the end needs to match perfectly with the curve on the handle. To do this, I made the handle first and then used it as a template to shape the end.

HANDLE. Shaping the curved handle requires a couple of cuts on the band saw and some sanding. I started with an oversized blank. You can make a beam compass to mark the arcs on the side of the blank, as shown in the left drawing in the box below. Once the arcs are marked, bevel the blank on both ends to square the ends of the finished handle with the arc (center drawing below). Then cut the arcs on the band saw.

Cutting a smooth curve on the band saw can be difficult. But if you cut just outside the layout line, you'll find you have less material left to sand it smooth (right drawing). When the handles are cut to rough shape, you can clean up the inside curve with a sanding drum. Use a soft sanding pad to sand the top of the handle. As you sand, you can check the thickness of the handle with the hardboard gauge you cut earlier, as shown in the margin photo on the left.

How-To: Make the Handles

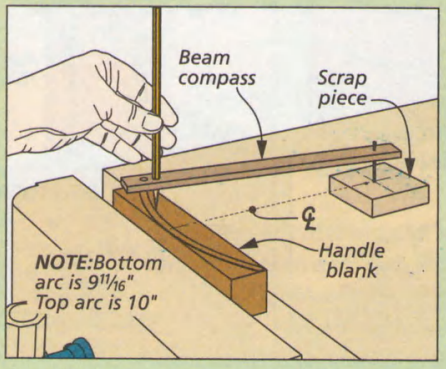

Lay Out Arc. *Use a scrap block as a pivot point for the beam compass as you mark the arcs in the handle blank.*

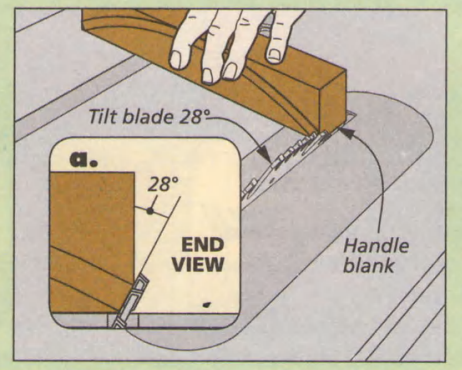

Trim Ends. *Tilt the saw blade 28° to square the end of the handle. Then bevel the ends of the oversized block.*

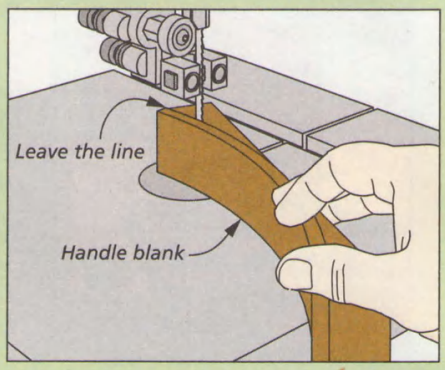

Band Saw Arc. *A band saw will make short work of the arcs. After they're cut, sand the handle to remove saw marks.*

MAKE THE ENDS

The tray ends are also shaped with several cuts on the table saw and band saw. For this reason, I again started with a pair of extra-long, wide blanks.

BEVELS. The first step is to bevel the ends. They're cut at the same 22½° angle you used earlier for the sides. But this time you'll use a miter gauge. This is shown in Step One on the right. After you cut the bevels, check that the fit of each end is snug to the bottom and sides of the tray. You may need to sand the bevels a bit to get a good fit.

ARC. With the ends fit, you can slip the handles into the notches on the sides and mark the arc at the top of each end, as shown in Step Two on the right. When they're marked, cut the arcs on the band saw, leaving the line again (Step Three).

OPENING. To cut the finger opening on each end, I used the band saw, as shown in Step Four. The measurements are shown in detail 'b' on the opposite page. Then it's back to the sanding drum to clean up the cutouts, as shown in Step Five. Sand the ends too, until they fit snugly under the curve of the handle, as shown in the Shop Tip below.

FINAL ASSEMBLY. To attach the ends and handles to the tray, start by gluing the ends into place on the tray. Remember to recess them ¼" from each end of the bottom. Next, insert the handles in the notches and center them. You can drill holes from the top of the sides through the handles and insert dowels to hold them in place (Step Six). A final pair of dowels is inserted through the bottom to hold the ends. Finally, trim the dowels and sand them.

All that's left is to add a finish and fill your new tray with your favorite snack. W

How-To: Make the Ends

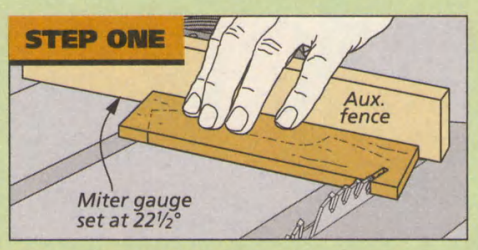

Bevel Ends. *With the miter gauge set at 22½°, bevel both ends of the blank to match the splay of the tray sides.*

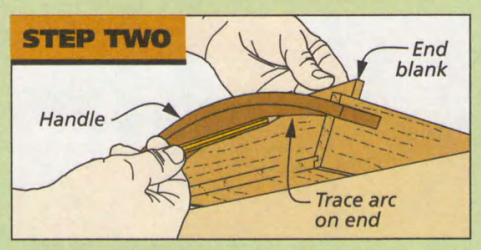

Trace Handle. *To fit the ends to the curved handle, insert the handle in the notches and use it as a guide to mark the curve.*

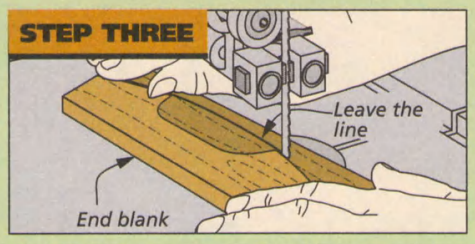

Cut Arc. *The arc at the top of the end is cut on the band saw. Cut on the waste side of the line to allow a custom fit.*

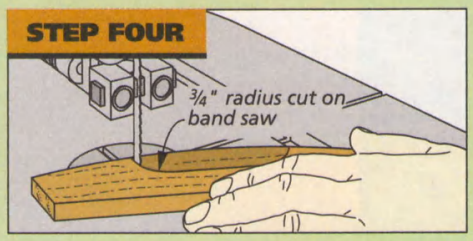

Cutout. *The cutout for the handle openings is also cut on the band saw. Again, cut on the waste side of the line.*

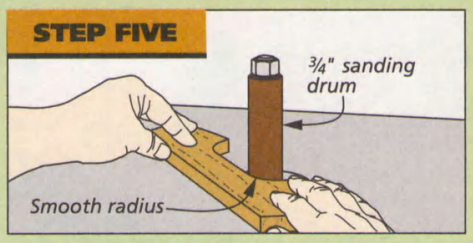

Drum Sand. *After cutting away the waste, use a sanding drum to clean up the edges of the cutout and sand to the line.*

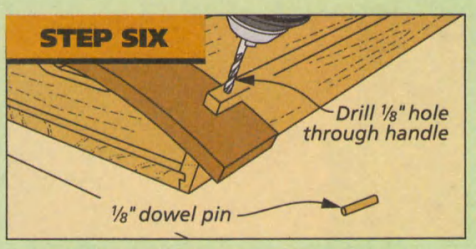

Install Pins. *With the ends and handle in place, drill a hole through the sides and into the handle, then insert a dowel pin.*

Shop Tip: Sanding to Fit

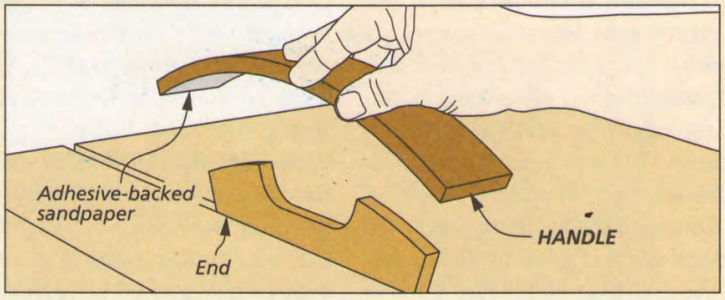

Fit End to Handle. *In order to get a good fit between the end and the handle, use the handle as a sanding block to smooth the arc.*

Materials & Cutting Diagram

A Sides (2)	5/16 x 2 - 16
B Bottom (1)	5/16 x 6½ - 16
C Handles (2)	5/16 x 1½ x 9½
D Ends (2)	5/16 x 1¾ - 7⅛
• Dowel (1)	⅛"-dia. x 5" rgh.

5/16" x 7¼" - 36" Maple (1.8 Bd. Ft.)

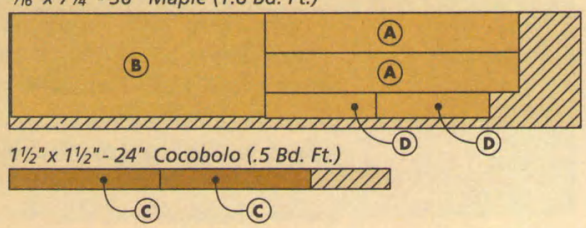

veneered Credenza

This project has a lot to offer — a sleek, eye-catching design, practical storage, and last but not least, a unique shop experience.

The clean, "retro" styling of this veneered credenza is a perfect example of the design concept "less is more." The idea is that you don't always need ornate detail to make a statement. Simply strip things down to the basics and allow a few, well-chosen design elements to carry the load. All it takes is a look at the photo above to realize how successful this minimalist philosophy can be.

I don't want to create the impression that this project is short on practical features and interesting woodworking. Nothing could be further from the truth. For starters, the storage possibilities are plain to see. The large drawers along with the enclosed shelf space offer versatile options. The credenza could find a home in the dining room, living room, office, or even the bedroom.

That decision can wait. First, you get to experience an enjoyable test of your shop skills. The basic casework is really pretty straightforward. But as I mentioned, it's the details that make the difference. The tapered legs, beveled case trim, the small, framed windows, and of course, the straight-grained fir veneer all present a great opportunity to take on some new challenges.

CONSTRUCTION DETAILS

OVERALL DIMENSIONS: 69¼"L x 20"D x 32"H

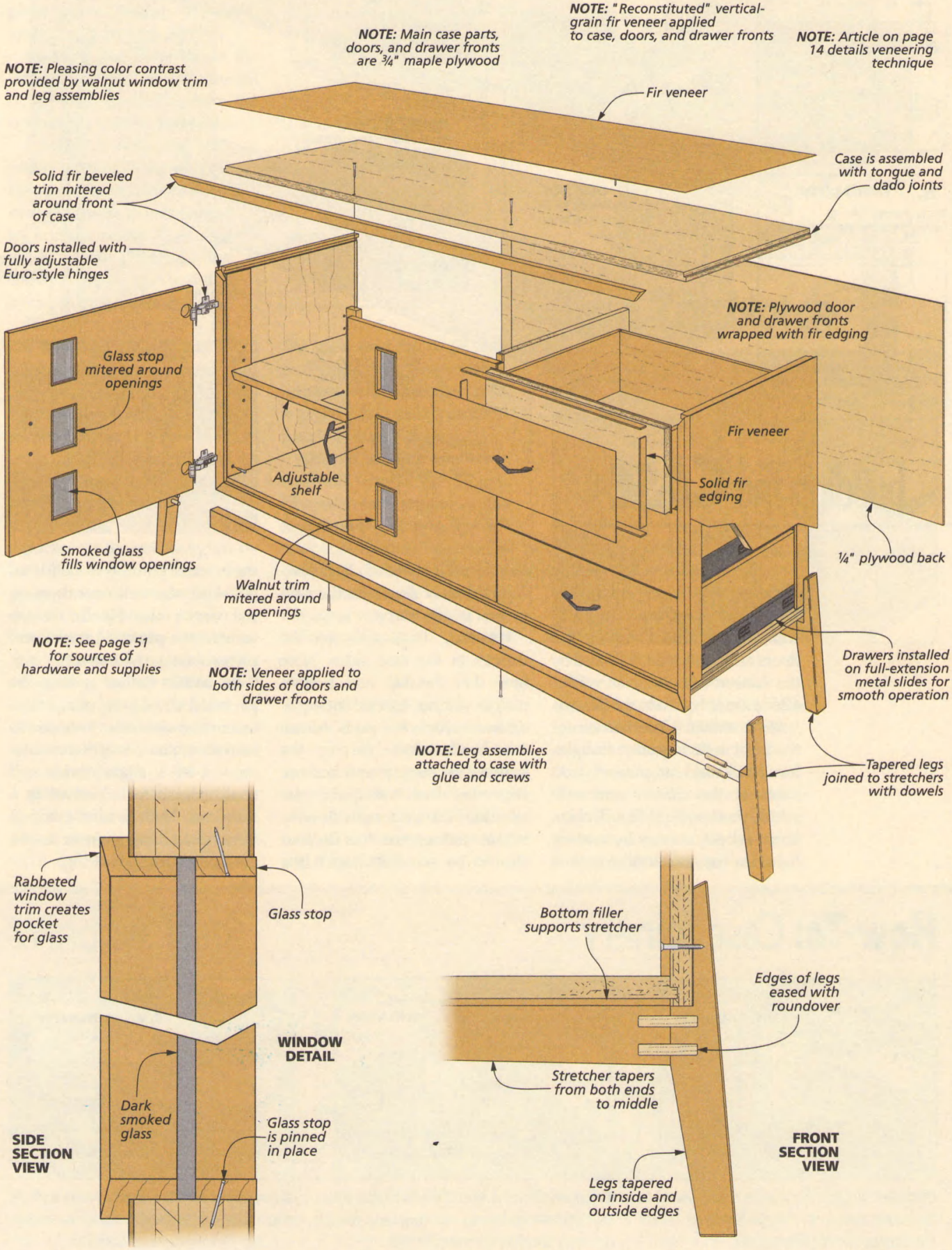

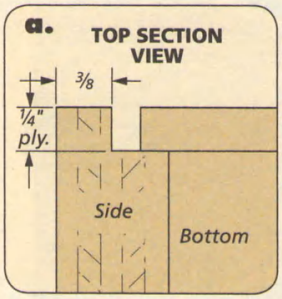

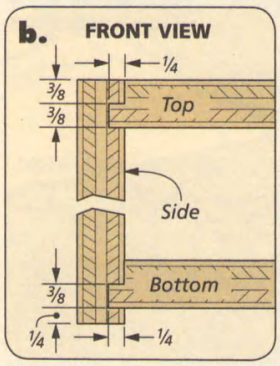

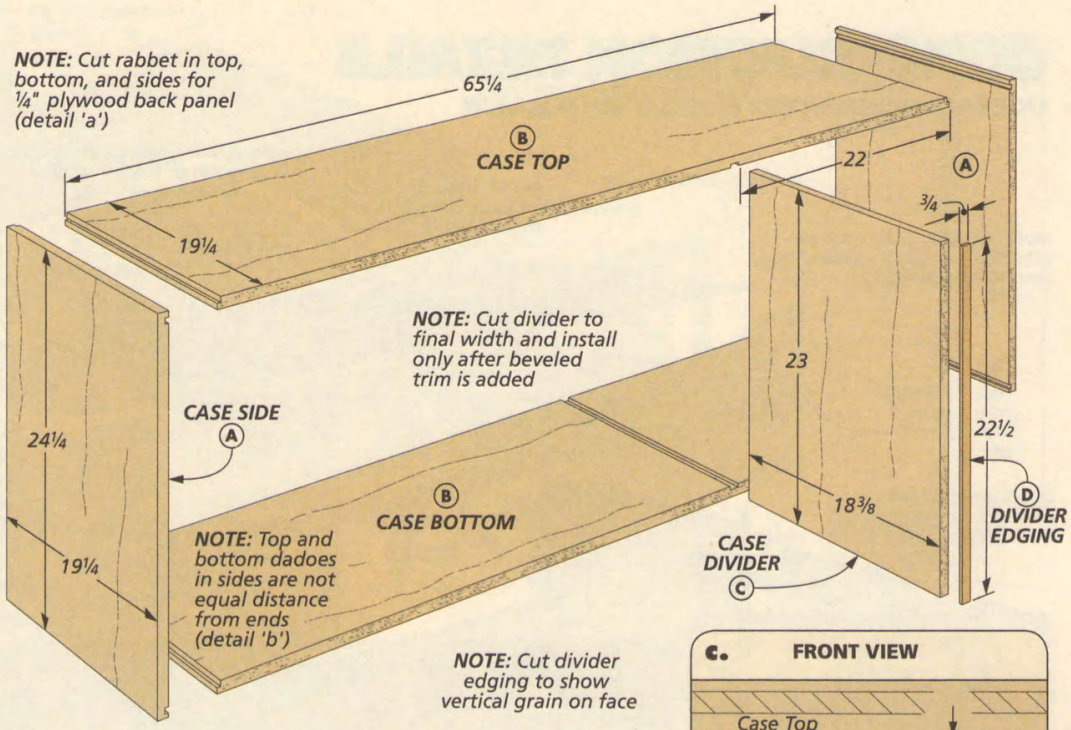

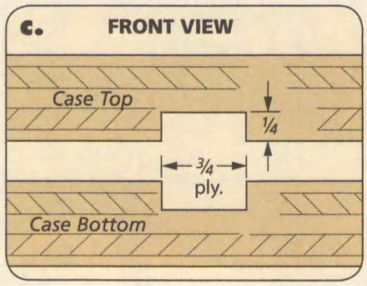

building the CASE

The project begins with assembly of the plywood case — two sides, a top, and a bottom. The front trim, divider, and a stop for the doors are then added, followed by the veneer. Installing the veneer after assembly covers the joinery.

SIMPLE JOINERY. Construction of the basic case is pretty straightforward. I used tongue and dado joints at the corners and full-width dadoes hold the divider. You can get started by cutting the sides, top, and bottom to final size from 3/4" plywood. The How-To box below illustrates the next several joinery steps.

REMINDERS. First up are the dadoes in the case sides. Note here that the top and bottom dadoes are not located an equal distance from the ends (detail 'b'). And when cutting the tongues on the top and bottom, remember that both pieces are oriented with the tongue down.

The dadoes for the divider should be sized to match the thickness of your plywood (detail 'c'). And be sure to cut them on the correct faces. Finally, rabbets to hold the plywood back complete this stage (detail 'a').

THE DIVIDER. Before cutting the plywood divider to size, I dry-assembled the case in order to take an accurate length measurement. I left it slightly wide so I could trim it for a custom fit a little later. Then I added a strip of 1/4"-thick vertical-grain fir to the front edge (main drawing).

How-To: Case Joinery

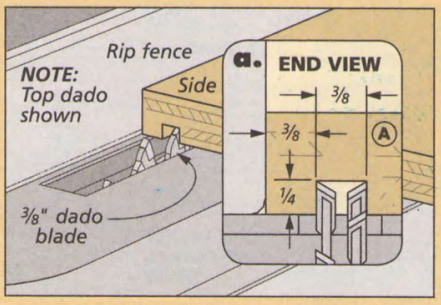

Dadoes. *With a 3/8"-wide dado blade in the table saw, use the rip fence to locate the dadoes in the case sides.*

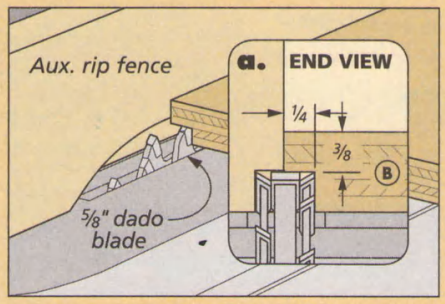

Tongues. *Bury a wider dado blade in an auxiliary fence to cut the tongues. Sneak up on a snug fit to the dadoes.*

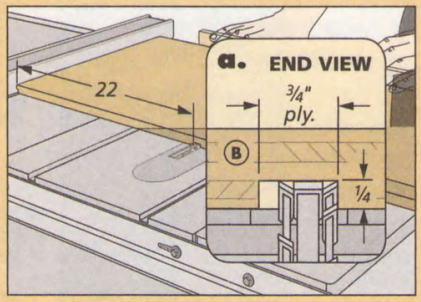

Divider Dadoes. *I sized the dadoes to the thickness of the plywood by adjusting the fence between passes.*

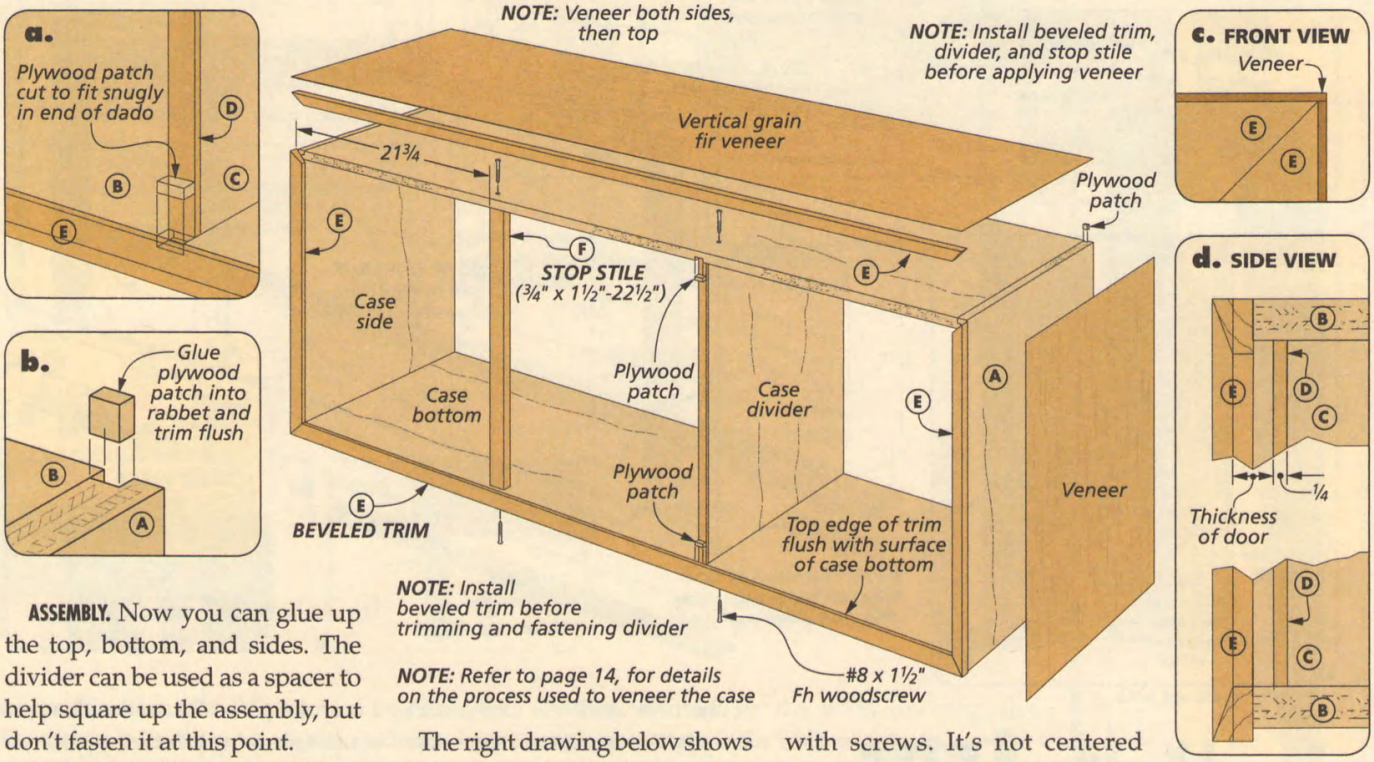

ASSEMBLY. Now you can glue up the top, bottom, and sides. The divider can be used as a spacer to help square up the assembly, but don't fasten it at this point.

BEVELED TRIM. Next, I made and installed the beveled trim that's mitered around the front of the case. A look at the box below will get you started. I'll just offer a little extra explanation.

I wanted the front edge of the trim to show a straight grain pattern so I cut the bevels on the face of ¾"-thick blanks. And since the same trim is applied to the front edge of the shelf, I made this extra piece at the same time.

When fitting the trim, note that the top and side pieces are flush with the outside of the case while the bottom piece is flush with the case bottom, as in detail 'd.'

The right drawing below shows a simple and effective way to clamp the beveled trim to the case. You'll find more on this in Shop Notebook on page 33.

DIVIDER & STOP STILE. With the trim in place, you can add the divider and stop stile. The trick is to position them a door's thickness from the edge of the beveled trim (detail 'd'). You'll need to measure the thickness of the plywood plus two thicknesses of veneer. (My total was 25/32".) After trimming the divider to final width, you can install it with glue and countersunk screws.

The stop stile can be cut to fit and likewise fastened in place with screws. It's not centered across the opening so check the drawing above for the location.

PATCHES. Before applying the veneer, you have to do a little patching, as shown in details 'a' and 'b.' I cut plywood patches to fill the ends of the rabbets at the top of the case. Similar patches fit into the front ends of the dadoes that hold the divider.

TIME FOR VENEER. The man-made veneer added to the top and sides of the case (detail 'c') is a dead-ringer for vertical-grain Douglas fir. I applied it using veneer glue and plenty of clamping pressure. The in-depth article on page 14 will fill you in on all the details.

Beveled Trim

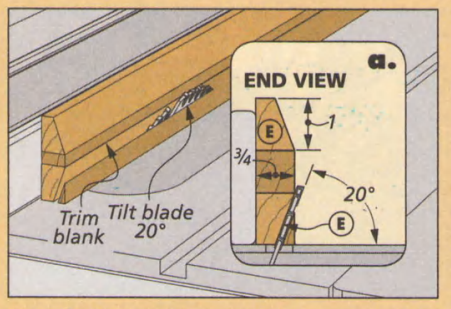

Bevel Cuts. *After cutting extra-wide, extra-long blanks, hold them vertically against the rip fence to bevel each edge.*

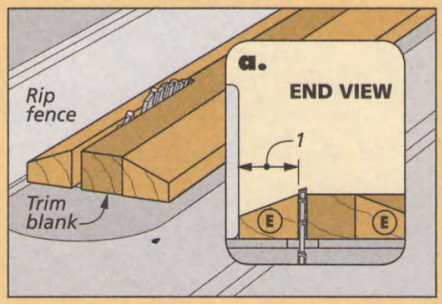

Rip to Width. *Return the blade to 90° and adjust the fence to rip a 1"-wide trim piece from each edge of the blank.*

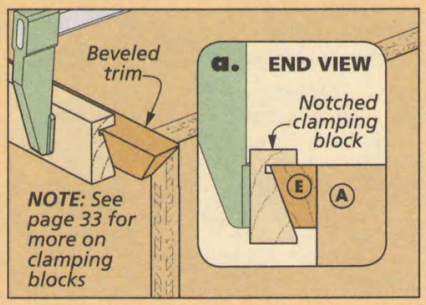

Clamping Helpers. *When gluing the trim in place, notched blocks provide a flat, stable clamping surface.*

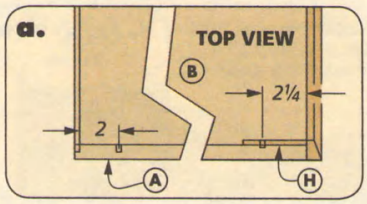

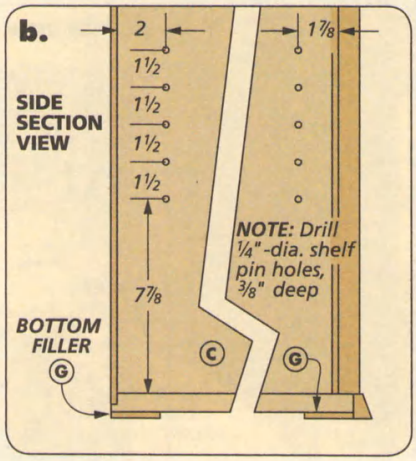

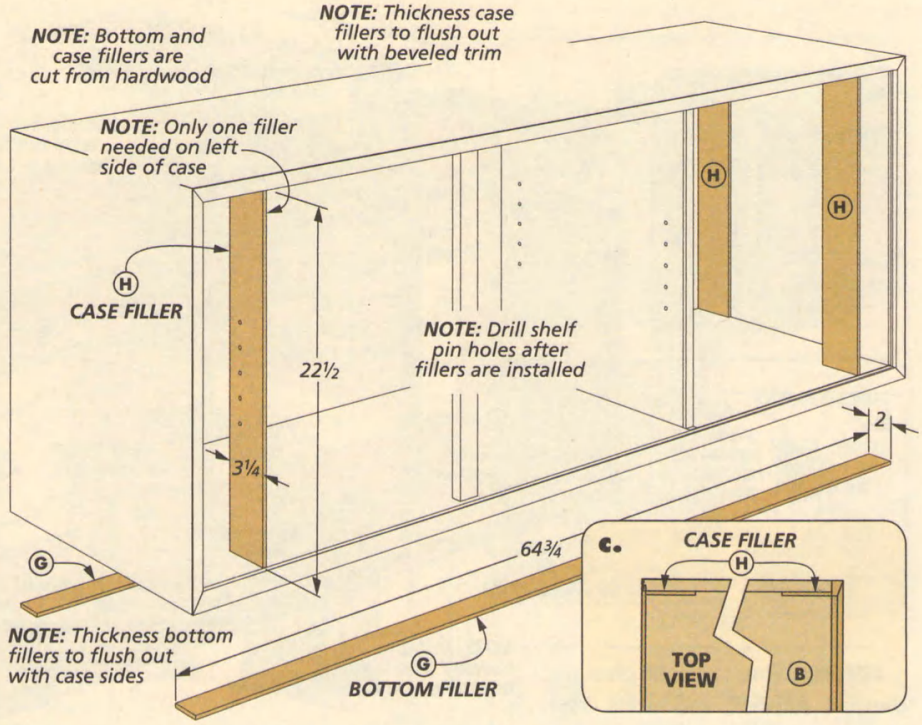

adding the LEGS

With veneer applied to the case, you can now start work on some of the important details. First, the case needs two different sets of hardwood fillers. Then after drilling a series of shelf pin holes in the left compartment, you can make and install the leg assemblies.

FILLERS. Fitting the fillers is easy — their purpose requires a little explanation. As you see in the main drawing above and detail 'b,' I glued two, long fillers to the underside of the case — one at the front and one at the back. They help support the leg assemblies. These pieces should fit flush with the case sides.

A second set of three identical fillers goes inside the case. A pair of fillers is added to the right side of the case for mounting the drawer slides (detail 'c').

The third piece is positioned in the front, left corner of the case. It's used to mount hinges for the door you'll install later (detail 'a'). Both front pieces should flush out with the beveled trim.

SHELF PIN HOLES. With the fillers in place, I completed work on the inside of the case by drilling shelf pin holes in the left side and the divider, as in the main drawing and detail 'b.' To do this, I made a simple template that registered on the bottom of the case.

LEG ASSEMBLIES. Now that the fillers are in place, you can start on the leg assemblies. The identical front and back assemblies each consist of a pair of tapered legs connected by a long stretcher. The legs are notched around the case to provide better support.

I began with the legs. The first step is to plane some walnut stock to 1½" thick. Then you can refer to the How-To box below for help shaping the legs. The pattern at right will provide all of the dimensions you need.

THE NOTCHES. Once the blanks are cut to overall size, the first step is

How-To: Make the Legs

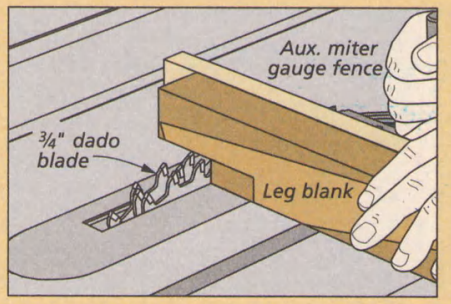

First, the Notch. *With an auxiliary fence on the miter gauge to back up the blank, cut the notch in multiple passes.*

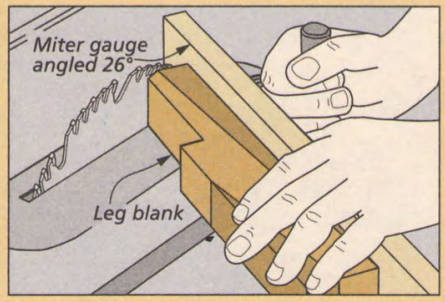

Top Bevel. *Next, switch to a single blade and angle the miter gauge to cut the short bevel on the top of each leg.*

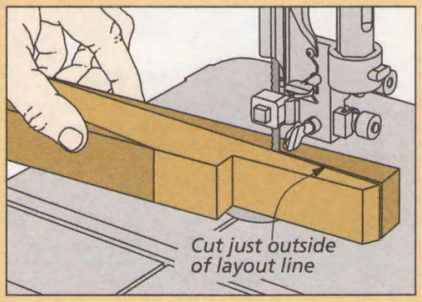

Two Tapers. *When cutting the tapers, stick close to your layout line and you'll minimize the cleanup to follow.*

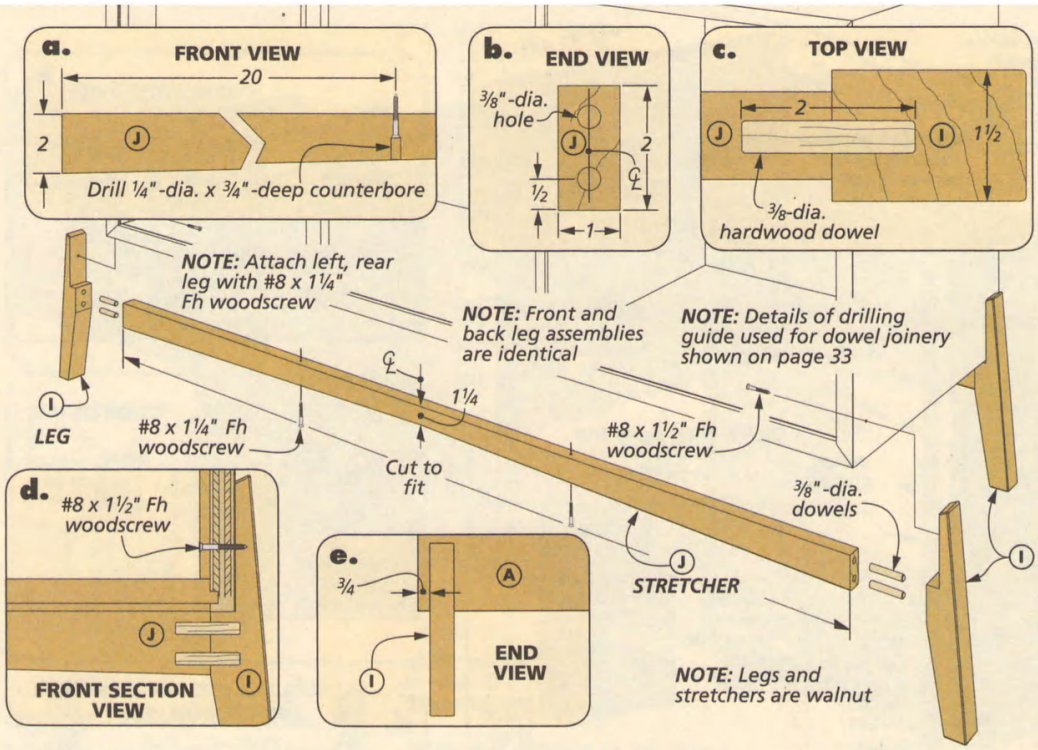

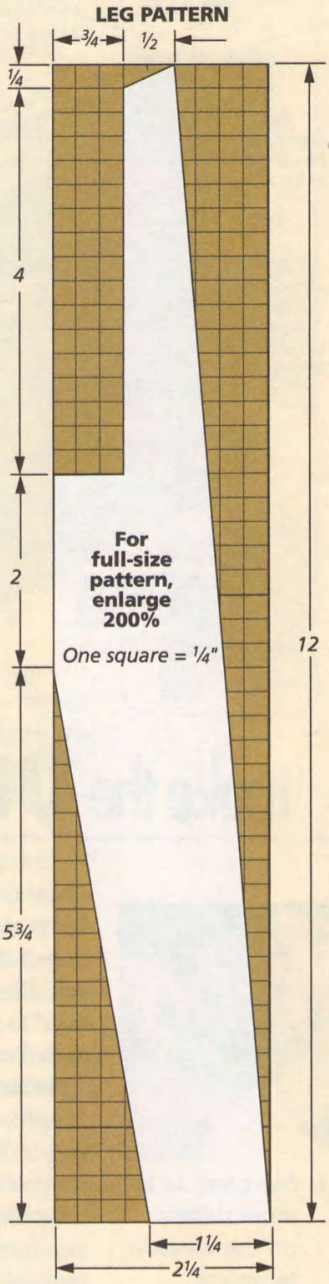

to cut the notch at the top of each leg. This can be accomplished quickly with a dado blade in the table saw. Just make sure the long face of each notch is smooth and flat.

BEVEL, TAPERS, & ROUNDOVERS. After cutting a slight bevel on the top of each leg, you can lay out and cut the tapers. All this takes is a quick trip to the band saw followed by some cleanup with a hand plane or sandpaper.

The final step is to round over the outside edges and the top and bottom of the legs. I routed the long edges. A little work with a sanding block took care of the top and bottom.

STRETCHERS. The stretchers that connect the pairs of legs are made from 1"-thick stock. However, before cutting the blanks to final size, you need to take an accurate length measurement. To get this dimension, I simply clamped each pair of legs in position at the bottom of the case and then measured between them.

TAPERS. As seen in the main drawing, the stretchers taper from each end to the center-point. I laid out the tapers and rough cut them on the band saw. A trip to the router table followed where I smoothed the cuts with a straightedge and flush trim bit. You can clean up the "peak" with a chisel or sanding block. Finally, drill a pair of counterbored screw holes in the lower edge of each stretcher (detail 'a').

ASSEMBLY. The legs and stretchers are joined with dowels (details 'b,' 'c,' and 'd'). The dowel holes can be drilled easily with a shop-made guide and a hand drill. You'll find information on making and using the guide on page 33.

INSTALLATION. Once the glueup is completed, installing the leg assemblies is pretty straightforward. First, I clamped them in position on the case and drilled pilot holes for the screws. After adding glue, reposition the assemblies, clamp them again, and insert the screws.

Shape the Stretchers

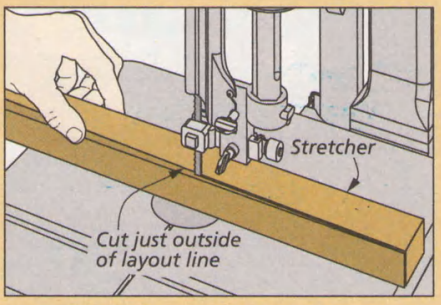

Rough Cut Tapers. *After laying out the tapers on the stretchers, take them to the band saw to rough out the waste.*

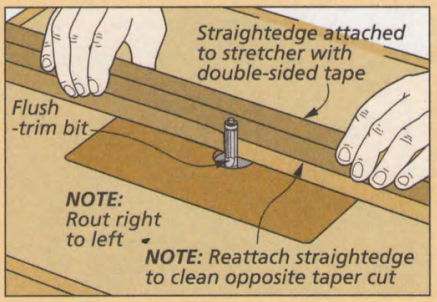

Smooth Tapers. *I used a straightedge and a flush-trim bit in the router table to clean up the rough taper cuts.*

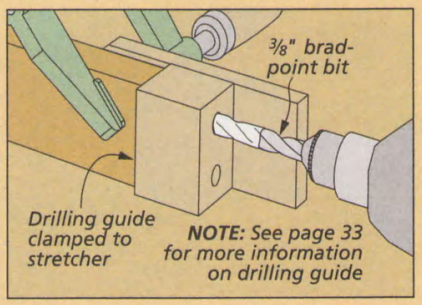

Drilling Guide. *A simple drilling guide will ensure that the dowel holes match up and the pieces align properly.*

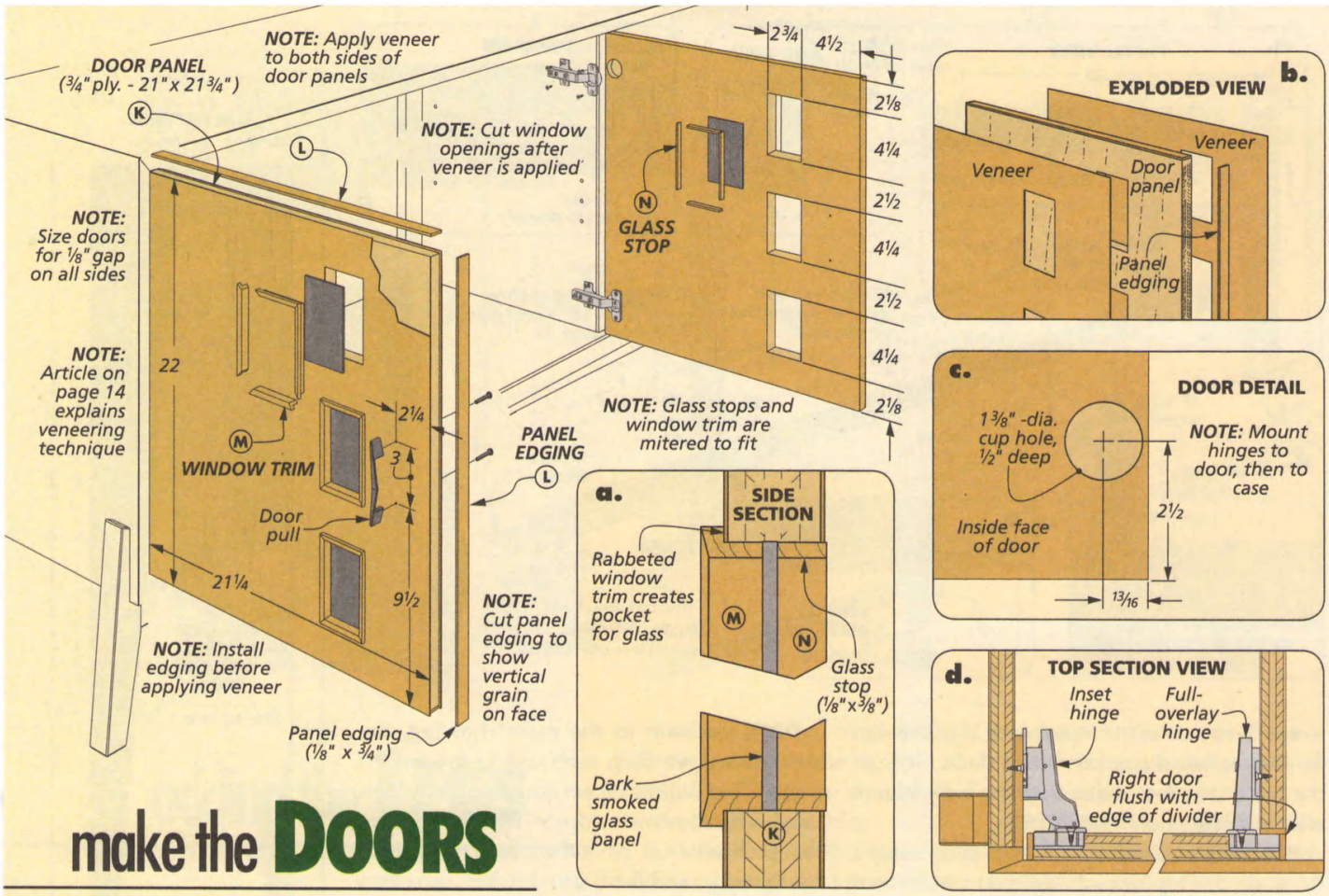

make the DOORS

▲ See page 32 for more details on the window template.

That's it for the case construction. Your next task is to make and install the doors that enclose the left side of the case. Then all you need to do to finish up this section is make the plywood shelf.

THE DOORS. The doors start out as ¾"-plywood panels. The edges are hidden with thin strips of vertical-grain fir and then veneer is applied to both sides. Finally, you'll create the window openings and trim them out.

The first step is to cut the door panels to size. When doing this, take note of how the two doors fit the opening (detail 'd'). The edging will allow a little bit of fitting later on, but it's best to start with accurately sized panels.

EDGING. Now comes the thin edging. I didn't bother to miter it around the panels. I simply glued pieces to the top and bottom first, trimmed them flush, and then followed with the sides.

VENEER. With the fir edging installed, the door panels can be veneered. I applied veneer to both sides to make certain the stresses on the panel were balanced. However, compared to the large case, veneering the individual door panels will be a breeze. Again, you can refer to the article on page 14 for help.

WINDOW TEMPLATE. After trimming the veneer on the doors, your next task is to create the

How-To: Window Openings

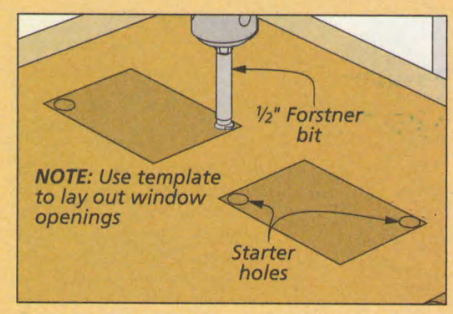

Starter Holes. *After using the template to lay out the openings, drill ½"-dia. starter holes in opposite corners.*

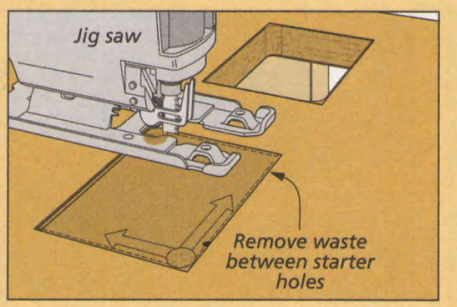

Rough Them Out. *To avoid chipping, I used a fine-cutting jig saw blade and stayed well inside my layout lines.*

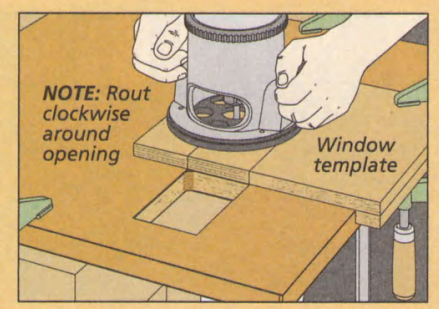

Clean Up. *With the template clamped over the opening, use a router and pattern bit to quickly clean it up.*

window openings. To help with this, I put together a simple template. You can read about making and using it on page 32.

THE STEPS. The How-To on the opposite page shows several of the steps needed to form the openings. I'll fill in the blanks.

I began by using the template to lay out all the window openings. Then I drilled a pair of starter holes in each layout to accommodate a jig saw blade. When rough cutting the openings, I was careful to avoid chipping the veneer.

Now, it's more work for the template. As you can see, I used it along with a hand-held router and a pattern bit to clean up the rough openings. You'll get smooth, straight edges in short order. Finally, I again called on the template to guide my chisel while cleaning up the corners.

WINDOW TRIM. Next, you can form a pocket for the smoked glass by installing small, rabbeted trim pieces around each opening (detail 'a,' opposite page). The box below illustrates the three-step process used to make this contrasting, walnut trim. A small rectangular stop is installed on the inside to retain the glass. The end result really complements the overall design.

MITERS. With the trim and stop in hand, you fit it to the openings. I mitered the outside trim to fit and then glued it in place. The glass stop can be fit with butt joints. You won't tack it in place until after the finish is applied and you're ready to install the smoked glass.

HINGES. The doors use easy-to-install, Euro-style hinges. However, each requires a different mounting style. The left door uses an inset hinge while the right needs an overlay hinge. But both are installed in the same way (details 'c' and 'd,' opposite page).

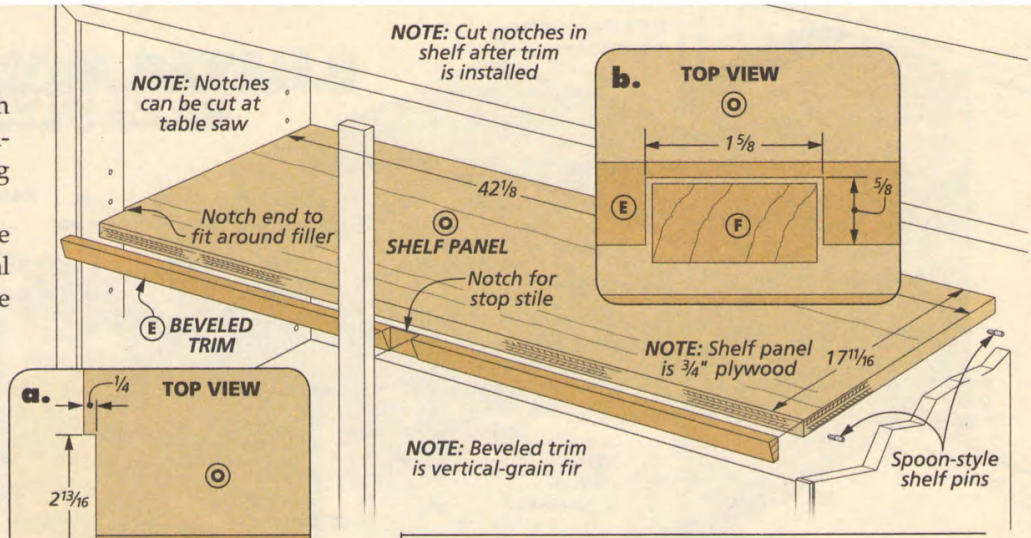

Shop Tip: Notch

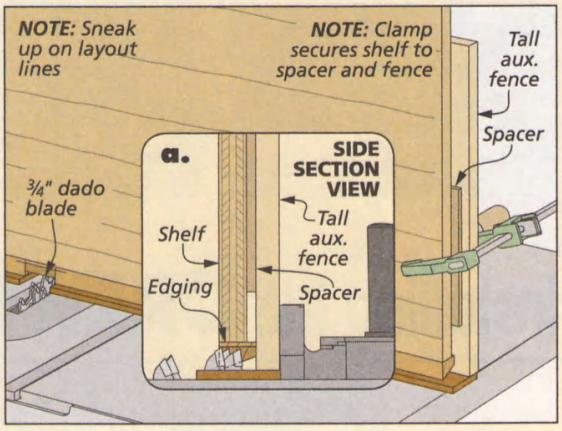

SHELF

The shelf will go quickly. It consists of a plywood panel with a piece of the same beveled trim used on the case glued to the front edge (detail 'a'). The only complication is that the shelf has to be notched to fit around the stop stile and the case filler.

The notches can be laid out directly by sliding the shelf into the case from the back and using a square to transfer their locations from the stile and case filler. You'll want to add a little extra for clearance. The Shop Tip above shows the setup I used to cut the center notch on the table saw.

Window Trim

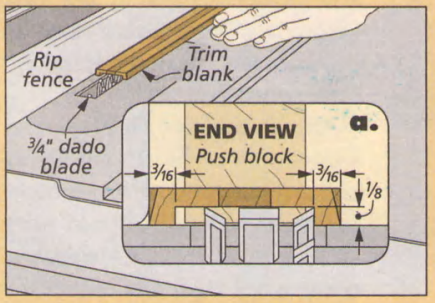

A Groove. *Using a dado blade, cut a centered groove in the blank, leaving 3/16" of material along both edges.*

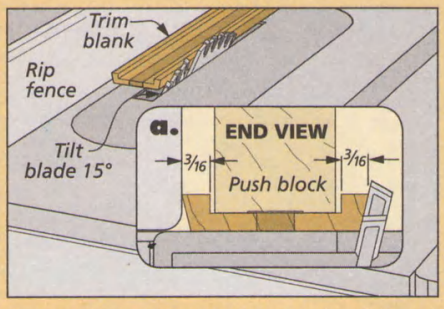

Bevel Cuts. *Tilt the saw blade 15° and then position the rip fence to cut a bevel along each edge of the blank.*

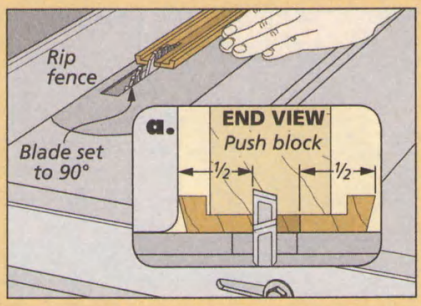

Two Pieces. *Now, return the blade to 90°, reposition the rip fence, and rip the blank into two, 1/2"-wide pieces.*

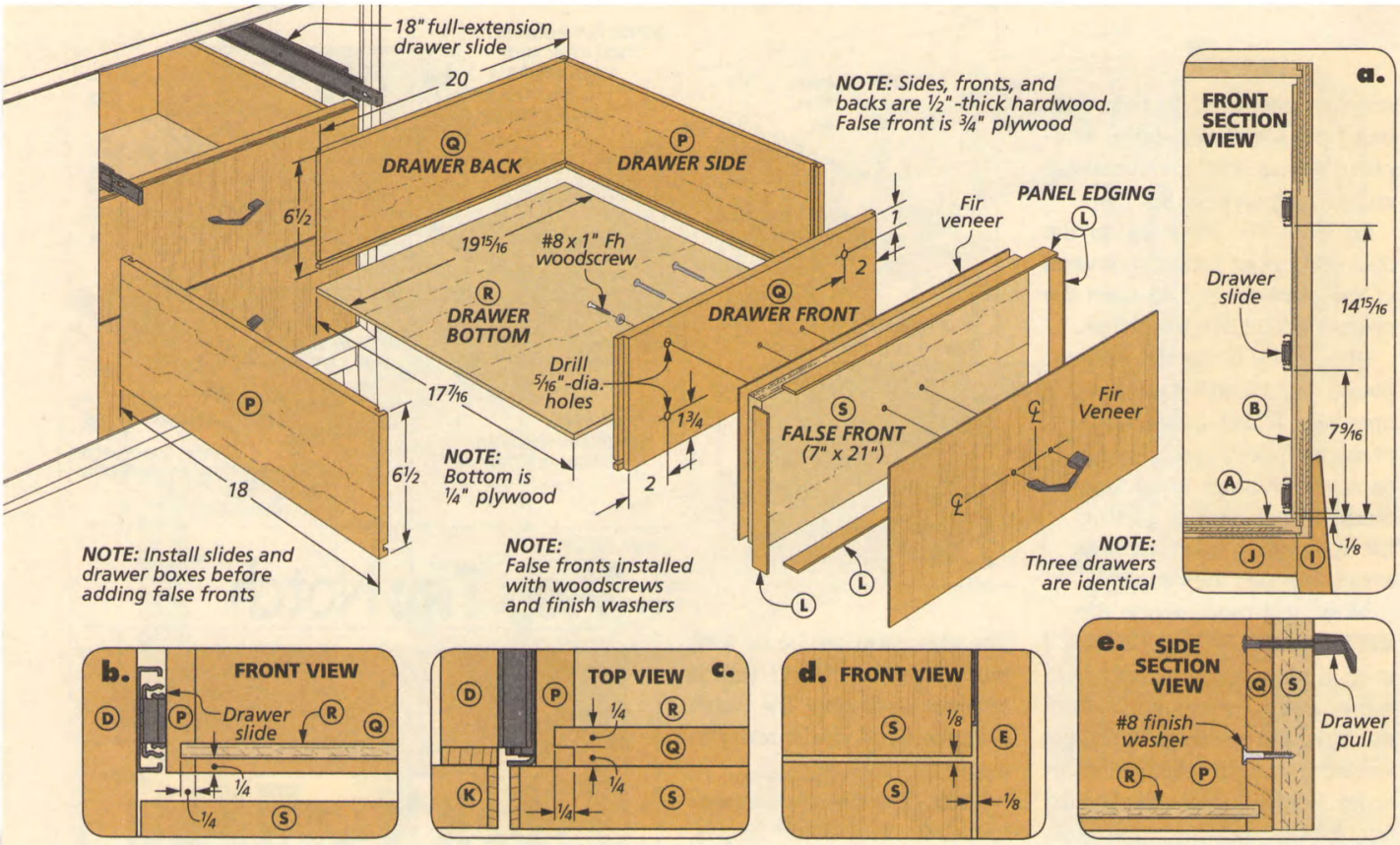

installing the DRAWERS & BACK

Building and installing the three identical drawers will wrap up the major construction. After this, all you'll have left to do is add the back panel to the case.

THE TASK AHEAD. As you can see above, the drawers are standard issue. I put together solid-wood drawer boxes with ¼" plywood bottoms using simple tongue and dado joinery. I made veneered false fronts and attached them with screws. Smooth, convenient operation is guaranteed by full-extension metal slides.

JOINERY. The How-To box below will guide you through the drawer joinery. In addition, you'll find some helpful drawer building tips on page 42.

When sizing the drawer boxes, be sure to allow 1" total side-to-side clearance to accommodate the slides. And before assembling the boxes, I drilled the oversized screw holes used later to fasten the fronts (detail 'e').

FALSE FRONTS. The false fronts start out exactly like the doors (main drawing above). I cut plywood panels to size, wrapped them with edging, and then applied veneer to both sides. The completed fronts are sized for a ⅛" gap on all sides (detail 'd').

INSTALLATION. Before attaching the false fronts, I installed the slides and drawer boxes in the case (detail 'a'). This makes it easier to position and adjust the fronts for even gaps all around.

With the slides in place and working smoothly, I used shims and double-sided tape to temporarily attach the false fronts. After drilling pilot holes in the fronts, remove the tape, and install the screws through finish washers.

BACK. You're in the home stretch. After adding the drawer pulls,

How-To: Drawer Joinery

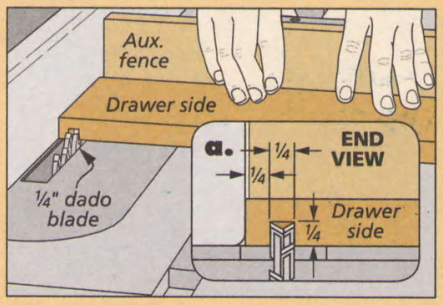

Side Dado. *Cut the dadoes in the drawer sides first. A dado blade in the table saw will make short work of this task.*

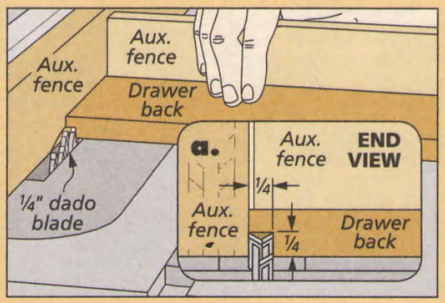

Tongues. *I installed an auxiliary rip fence before cutting the tongues. Sneak up on a snug fit to the dadoes in the sides.*

you can cut the ¼" plywood back to size and attach it with glue and brads, as shown at right.

THE END. Finish comes next. The "natural" look I settled on really highlights the contrast between the straight-grained fir and the walnut. You'll find finishing details on page 51. Finally, you can install the glass in the doors. Now it's time to scout out a good spot to display your "back-to-the-future" credenza.

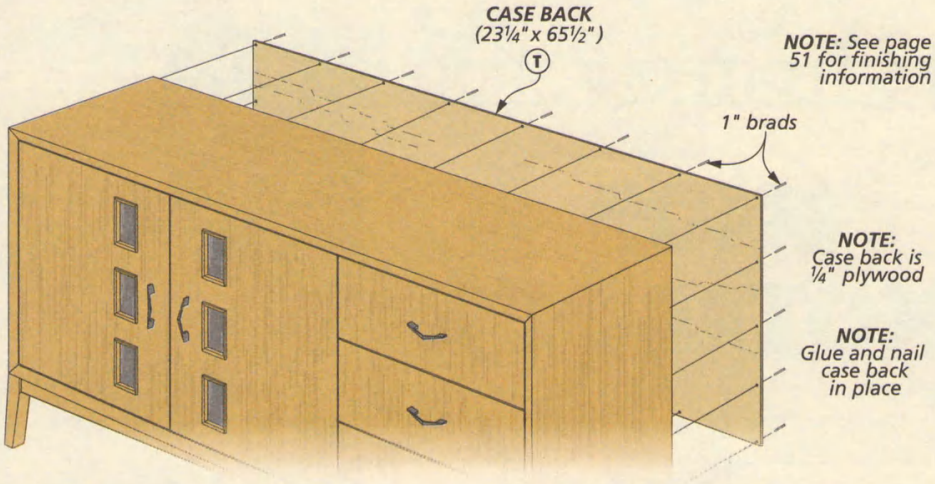

Materials, Supplies & Cutting Diagram

A	Case Sides (2)	¾ ply. - 19¼ x 24¼
B	Case Top/Bottom (2)	¾ ply. - 19¼ x 65¼
C	Case Divider (1)	¾ ply. - 18⅜ x 23
D	Divider Edging (1)	¼ x ¾ - 23
E	Beveled Trim (1)	¾ x 1 - 20' rgh.
F	Stop Stile (1)	¾ x 1½ - 22½
G	Bottom Fillers (2)	¼ x 2 - 64¾
H	Case Fillers (3)	¼ x 3¼ - 22½
I	Legs (4)	1½ x 2¼ - 12
J	Stretchers (2)	1 x 2 - 66 rgh.
K	Door Panels (2)	¾ ply. - 21 x 21¾
L	Panel Edging (1)	⅛ x ¾ - 32' rgh.
M	Window Trim (1)	¼ x ½ - 110 rgh.
N	Glass Stop (1)	⅛ x ⅜ - 110 rgh.
O	Shelf Panel (1)	¾ ply. - 17 11/16 x 42⅛
P	Drawer Sides (6)	½ x 6½ - 18
Q	Drawer Fronts/Backs (6)	½ x 6½ - 20
R	Drawer Bottoms (3)	¼ ply. - 17 7/16 x 19 15/16
S	False Fronts (3)	¾ ply. - 7 x 21
T	Case Back (1)	¼ ply. - 23¼ x 65½

- (3) 26" x 99" Vertical-Grain Fir Veneer
- (5) Drawer/Door Pulls w/Screws
- (3 pr.) 18" Full-Extension Drawer Slides
- (1 pr.) Full-Overlay Euro-Style Hinges
- (1 pr.) Inset Euro-Style Hinges
- (4) ¼" Spoon-Style Shelf Supports
- (8) ⅜" x 2" Dowels
- (6) 2 11/16" x 4 3/16" Dark Smoked Glass (⅛" thick)
- (1) #8 x 1¼" Fh Woodscrew
- (15) #8 x 1½" Fh Woodscrews
- (12) #8 x 1" Fh Woodscrews
- (12) #8 Finish Washers
- 1" Brads
- ½" Brads

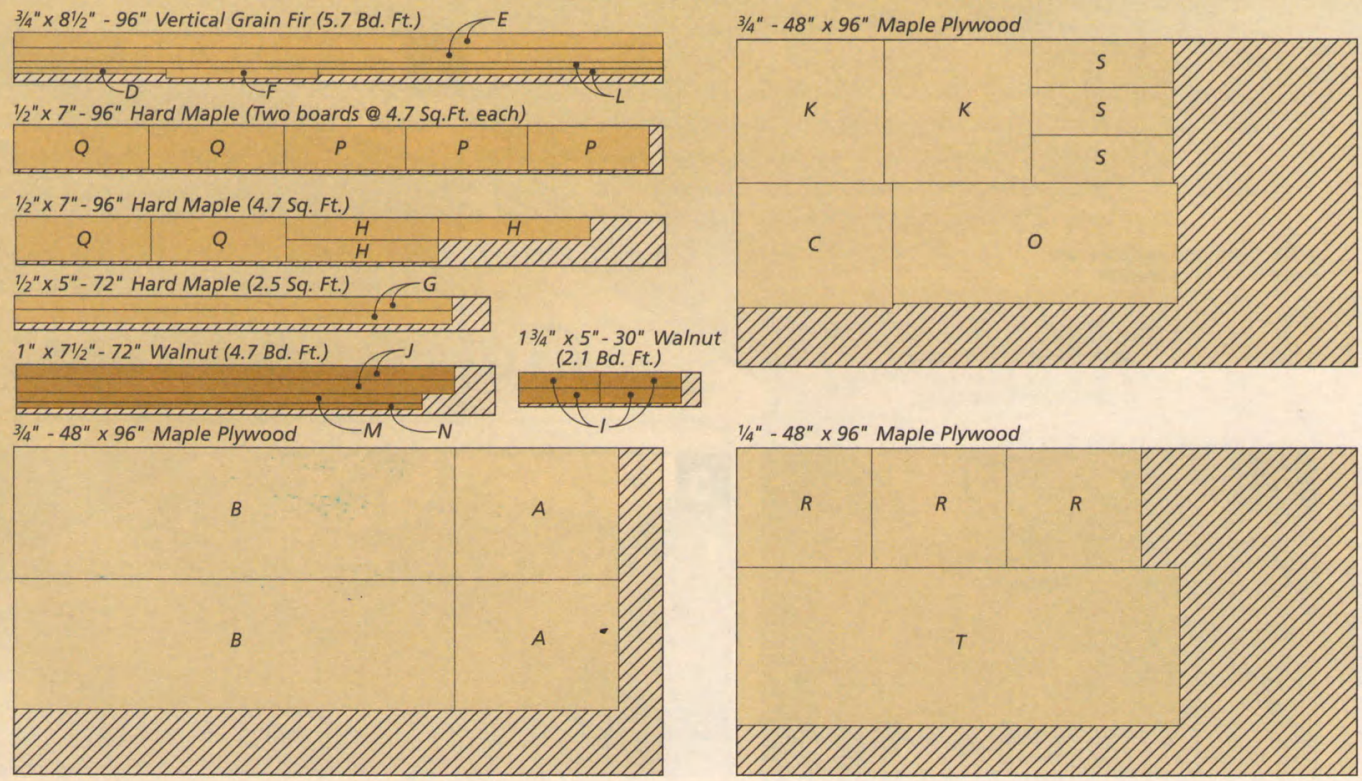

SHOP NOTEBOOK

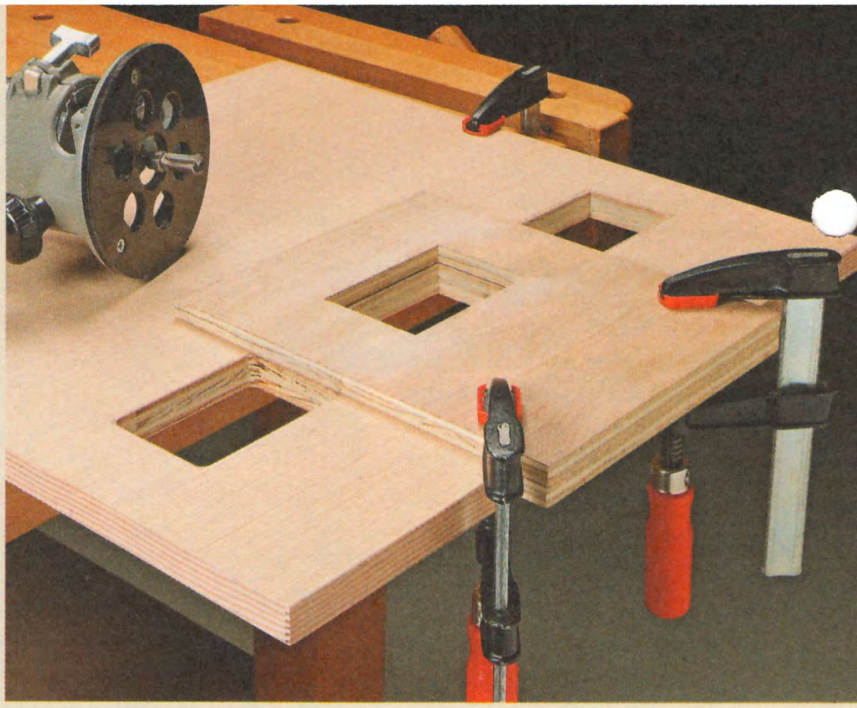

3-in-1 Template

The "windows" on the doors of the credenza on page 22 are one of the main focal points of the project. Because of this, you'll want to take the time to accurately lay them out and cut them. In order to make this process as foolproof as possible, I used a shop-made template, as shown in the photo.

TEMPLATE. As you can see in the drawing below, the template is made out of ½" plywood. In order to create the rectangular opening in the template, I glued it up out of four separate pieces, as shown below. Then I added a narrow cleat to the underside of the template to register it against the edge of the door.

USING THE TEMPLATE. The template can be used for three separate steps in making the windows. To start with, after laying out the top edge of each window opening, you can use the template to trace the openings on each door, as shown in Figure 1.

After drilling some starter holes and rough cutting the openings with a jig saw, I used the template and a pattern bit to trim the openings to final size. Simply clamp the template in place and trim the edges with the router (Figure 2).

As the final step to complete the windows, you can use the template as a guide for your chisel as you square up the corners of each opening, as shown in Figure 3.

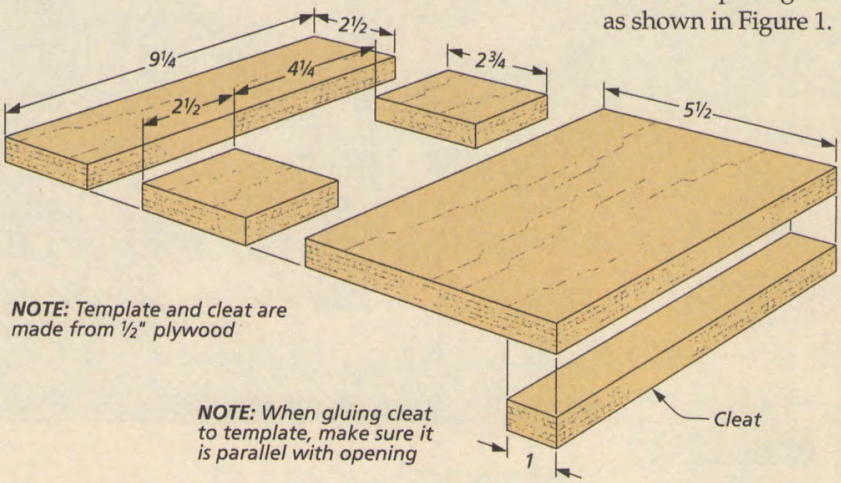

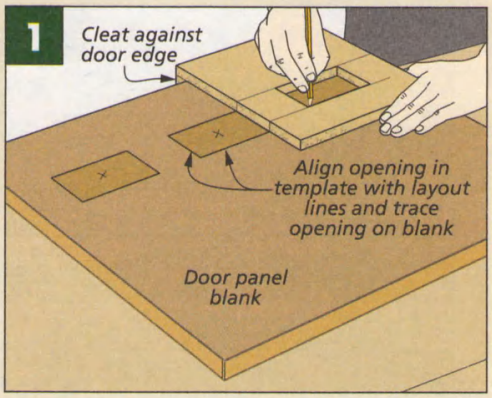

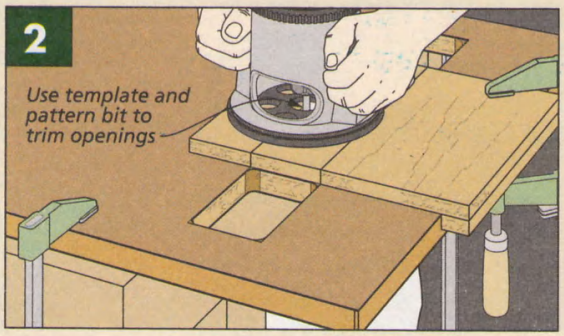

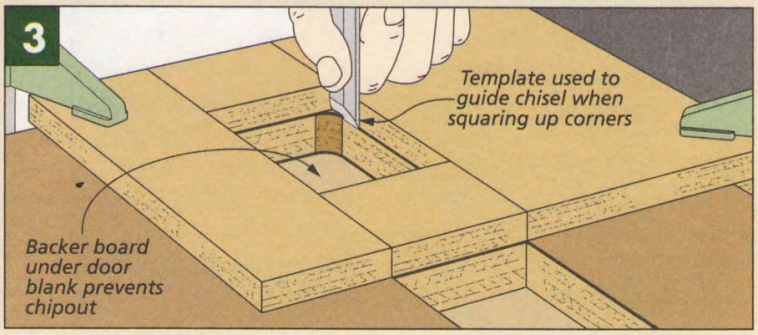

Dowel Centers

The doors of the display cabinet on page 34 are held closed with small, rare-earth magnets and washers. The magnets are glued with epoxy into holes drilled into the door stops at the top and bottom of the case. And small, steel washers are installed in shallow counterbores on the inside face of each door.

The trick to installing the magnets and washers is keeping them aligned. An easy way to do this is to use dowel centers. The process is pretty simple. Before gluing the magnets into the cabinet, simply place a ¼"-dia. dowel center into the hole and close the door against it firmly to make an indentation (Figure 1).

After removing the door from the cabinet, you can use the mark left by the dowel center to line up your drill bit when drilling the counterbore for the steel washer (Figure 2).

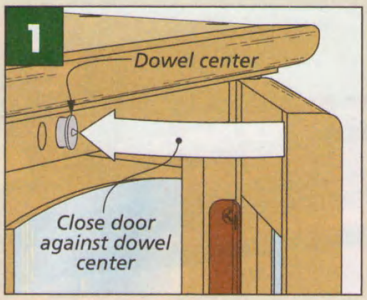

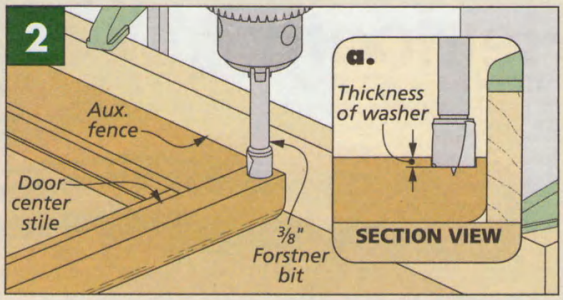

Notched Clamping Blocks

The front edges of the case of the credenza are covered with wide trim. But the beveled profile of the trim makes it difficult to clamp in place. To make the task easier, I created some custom clamping blocks that match the beveled profile of the trim.

To make the blocks, I started with some 1½"-wide strips of ¾"-thick stock. I created the beveled notch on the blocks by making two intersecting rip cuts on the table saw, as shown in Figures 1 and 2. Then you can cut the blocks to convenient lengths and place them over the trim as you clamp it in place (Figure 3).

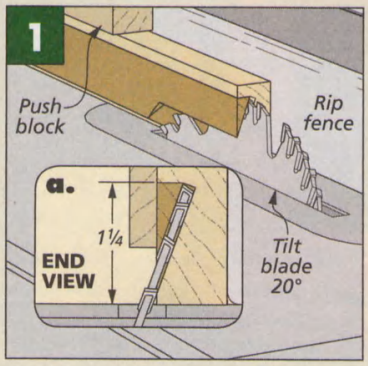

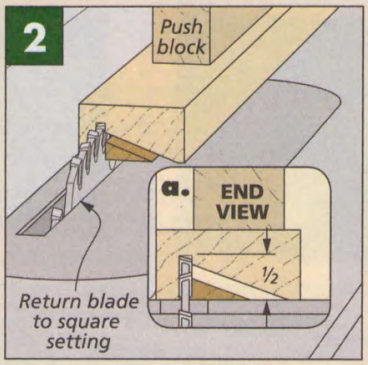

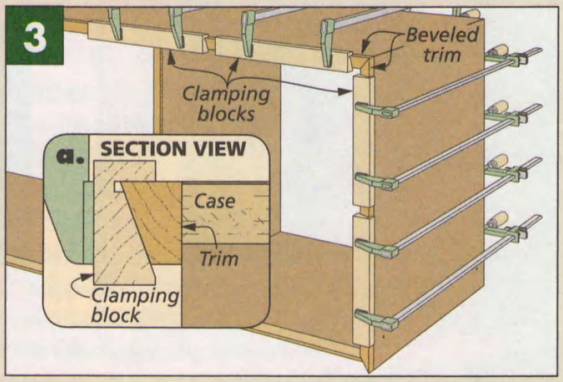

Drilling Guide

The legs and stretchers of the credenza are joined with dowels. But drilling the holes for the dowels presented a couple of challenges. First, you'll need to make sure the holes are properly aligned. And second, you need a way to guide the drill bit to prevent it from wandering, particularly when drilling into the end grain of the stretchers.

To accomplish both these goals, I made a simple drilling guide, like the one you see at right. The guide is just a block of wood with a pair of holes drilled through it. A fence attached to one side of the block allows you to clamp the guide to your workpiece. And a ¼"-thick spacer glued to one end of the fence allows you to use the same guide for drilling the holes in both the stretchers (Figure 1) and the legs (Figure 2).

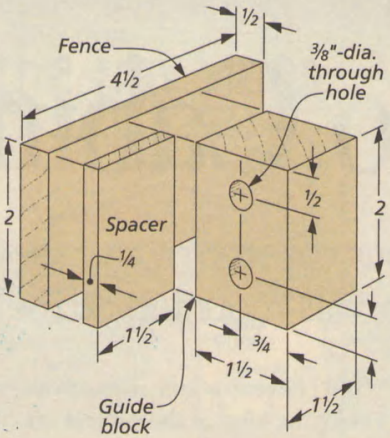

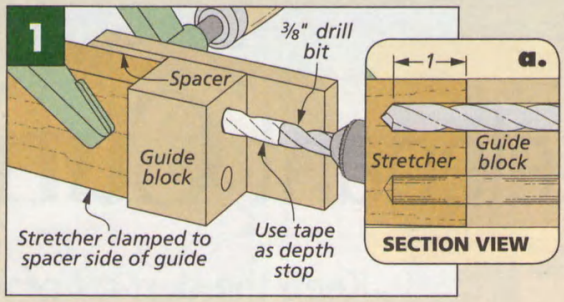

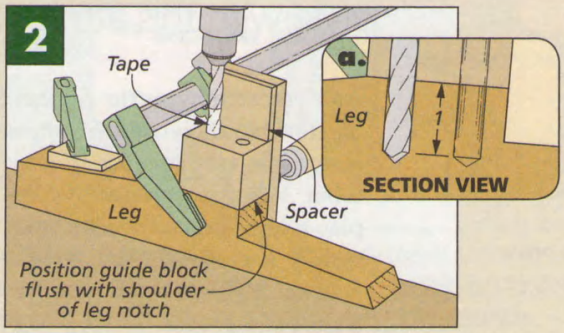

elegant Curio Cabinet

Keep the dust off of your collectibles and show them off in style with this attractive, wall-mounted cabinet.

An eye-catching curio cabinet, like the one shown above, offers a versatile way to spice up any room. Whether you use it to display a few special collectibles or simply some books and knick-knacks, it's sure to become the focus of the room.

But I have to admit, as much as I enjoy looking at the cabinet on the wall, I admire its construction even more. It combines several straightforward shop techniques to create a piece that's great looking but easy to build. From the built-up shop-made moldings on the top and bottom to the frame and panel doors, there's nothing here that's too difficult or requires any special tools.

I chose cherry for my cabinet, but it would look great in just about any hardwood. You can make one to match any decor.

CONSTRUCTION DETAILS

OVERALL DIMENSIONS: 37 11/16"W x 8 7/8"D x 27 5/8"H

Sides are attached to top and bottom panels with screws

Glass panels held in place with glass stop

Cabinet mounts to wall through cleat

Glass panels fit in wide rabbet in arched rails

Sturdy and simple stub tenon and groove joinery used for doors and cabinet sides

Adjustable shelves allow you to configure the cabinet to suit a variety of items

Cove and thumbnail moldings are combined to create a unique profile

***NOTE:** See page 51 for hardware sources*

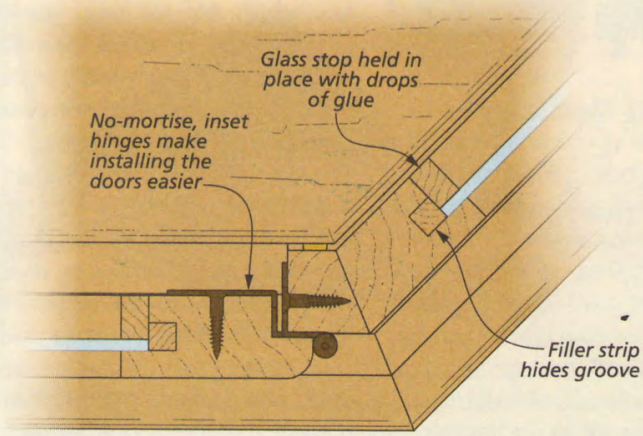

TOP SECTION VIEW

SIDE SECTION VIEW

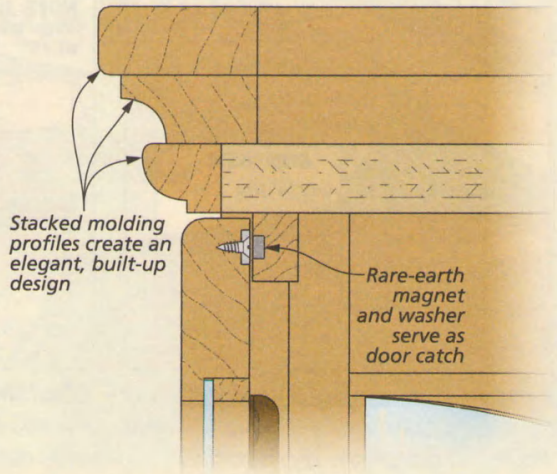

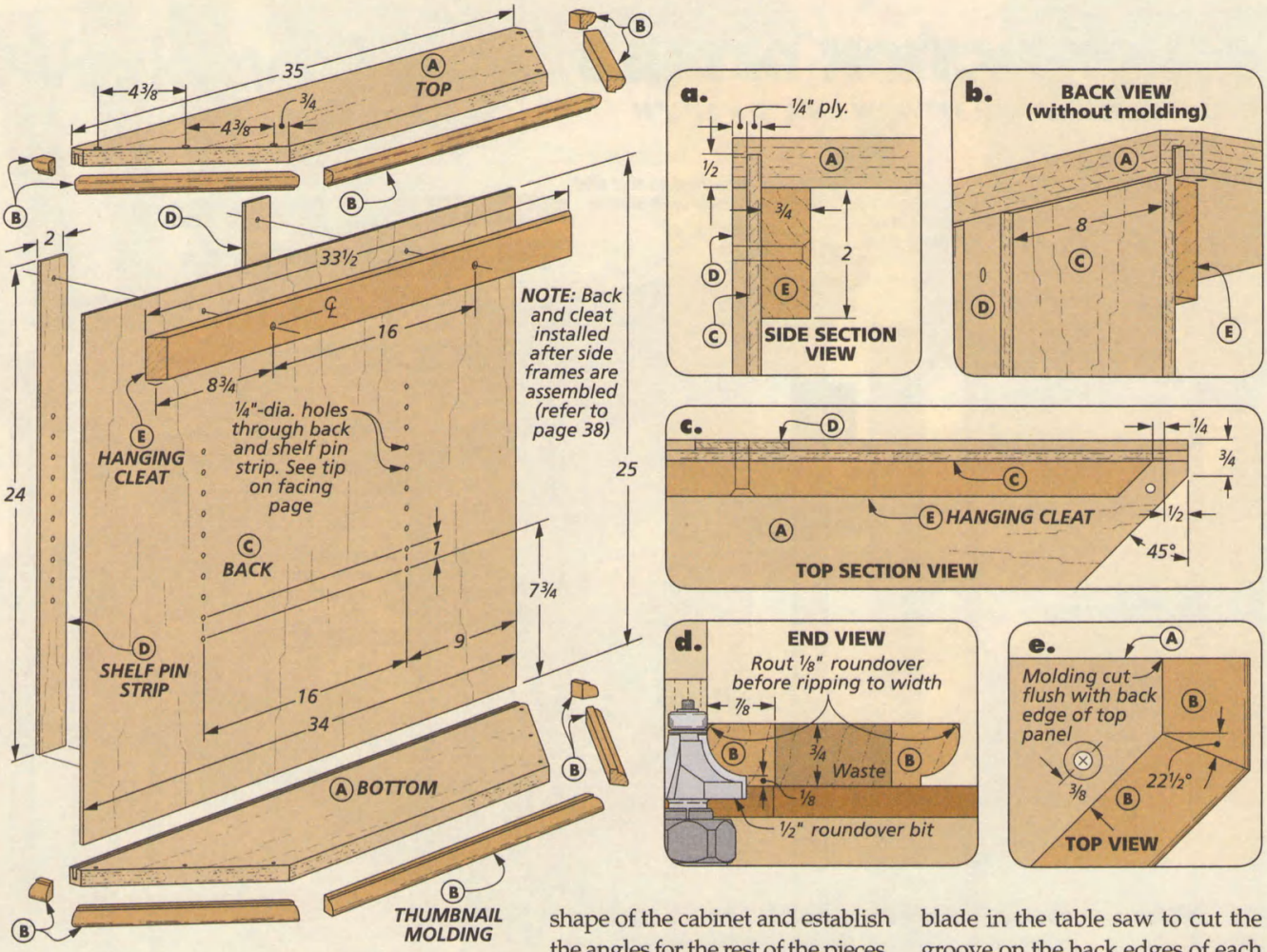

starting the CASE

The basic elements of the case provide the structural foundation for the cabinet. For this reason, I started with the plywood top and bottom panels. They define the shape of the cabinet and establish the angles for the rest of the pieces. After adding molding to cover the plywood edges, you'll make the back and hanging cleat and install them after you complete the side frames shown on page 38.

TOP & BOTTOM PANELS. You can begin by cutting the top and bottom panels to overall width and length. I used a combination blade in the table saw to cut the groove on the back edges of each piece to hold the back panel (left drawing, below). Using a single blade allows you to sneak up on a snug fit for the plywood back.

The next step is to bevel the ends of the panels. For this, I installed a long auxiliary fence on the miter gauge. As you can see in the box below, the extra

How-To: Cut the Top & Bottom Panel

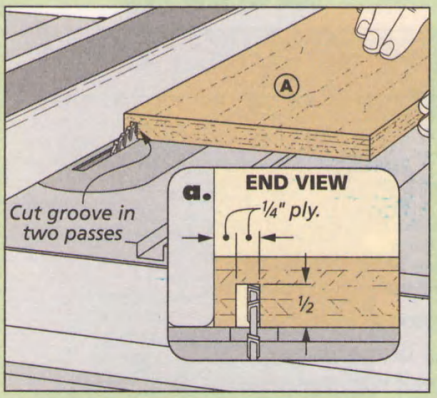

Groove First. *While the panel is still square, cut the groove along the rear edge that houses the plywood back.*

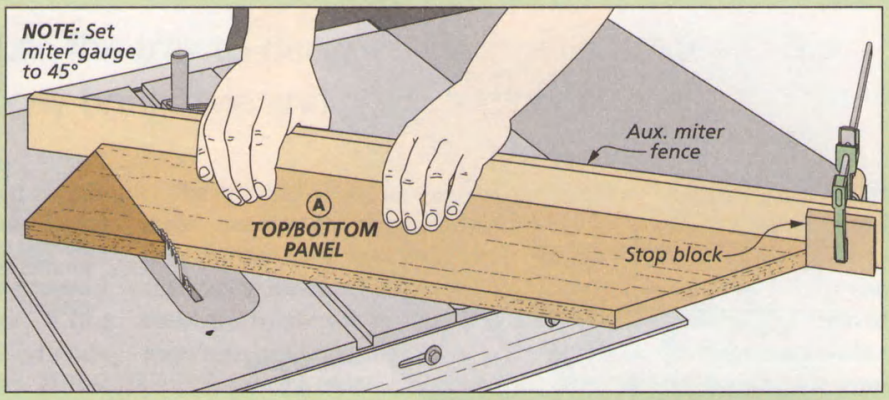

Bevel the Ends. *To make sure that both panels are identical, clamp a stop block to an extra-long auxiliary fence. Make the first cut and adjust the stop block if needed. After cutting the bevel on one end, flip the workpiece to cut the opposite end.*

length not only makes it easier to manage the workpiece while you cut the bevels, but it also lets you use a stop block to make sure both panels end up the same shape. Note that the ends of the panels remain square (details 'c' and 'e,' opposite page).

You can complete work on the panels by drilling the countersunk screw holes shown in the main drawing and detail 'e' on the opposite page. You'll use these holes to attach the sides later.

THUMBNAIL MOLDING. To conceal the plywood edges, I used a simple, shop-made molding. Just rout the ½"-rad. profile on both edges of an extra-wide blank (detail 'd,' opposite page). After flipping the blank over to rout the ⅛" roundover, head back to the table saw to rip the molding strips free.

To cut the angles needed to install the molding on the plywood panels, I once again turned to the miter gauge and auxiliary fence. The drawing below shows the setup. It's a good idea to make a couple test cuts and double-check the results before cutting and fitting the final molding.

Once you have the angle set properly, you'll find it works best to cut and fit each piece individually. Do this in sequence, starting with the long, front pieces. I like to cut them just a hair long, then trim them to a perfect fit. After that, work your way around each end, carefully cutting the pieces for a gap-free fit.

An easy and effective way to install the molding is to use tape to clamp the pieces while the glue dries. Don't forget to put a little glue on the ends of each piece of molding while you're at it.

Shop Tip: Shelf Pin Holes

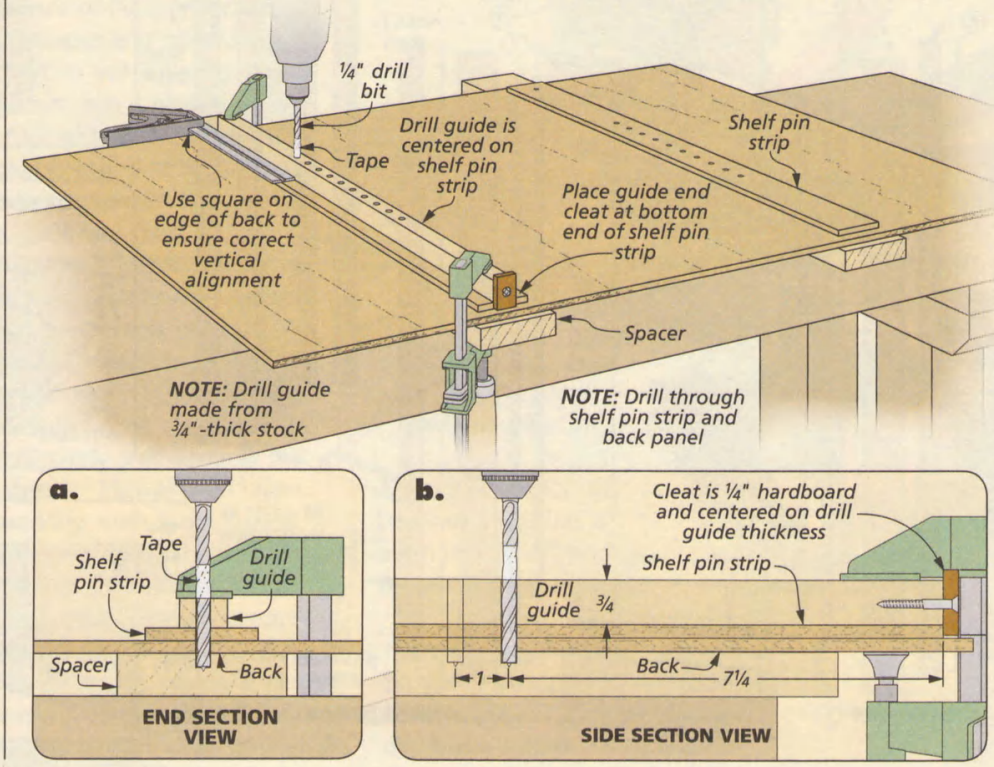

MAKE THE BACK. At this point, you're ready to make the plywood back. After cutting the back to final size, I cut the pair of shelf-pin strips to size as well. You can install the strips as shown in details 'a' and 'b,' opposite page.

After the glue dries, you're ready to drill the shelf-pin holes. The Shop Tip above shows how I used a shop-made guide to drill the holes. It's just a narrow piece of stock with the hole locations marked and drilled at the drill press. A cleat on one end registers the drilling guide from the bottom end of each strip to make sure the shelf-pin holes line up properly. (You'll use it again when you drill the matching holes in the side panels later.)

HANGING CLEAT. All that remains is to make the cleat you'll use to mount the cabinet on the wall. I used the miter gauge again to cut the cleat to length (detail 'c,' opposite page). After drilling the mounting holes, you can set the back and cleat aside while you work on the side frames.

Cutting the Molding

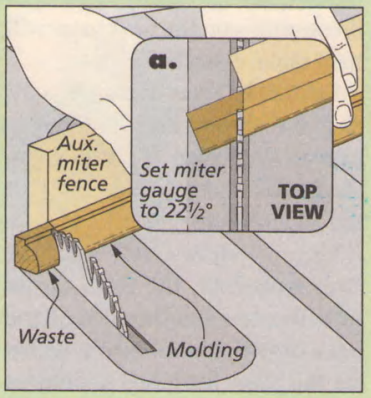

Molding. *The auxiliary fence backs up the cut and prevents tearout as you miter the molding.*

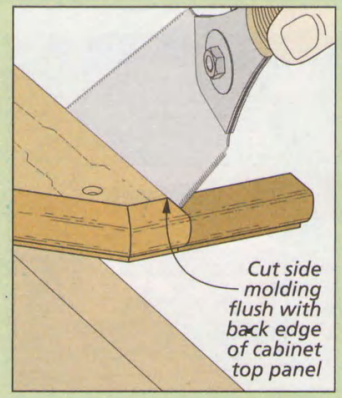

Flush Cut. *A hand saw makes short work of trimming the molding flush with the back.*

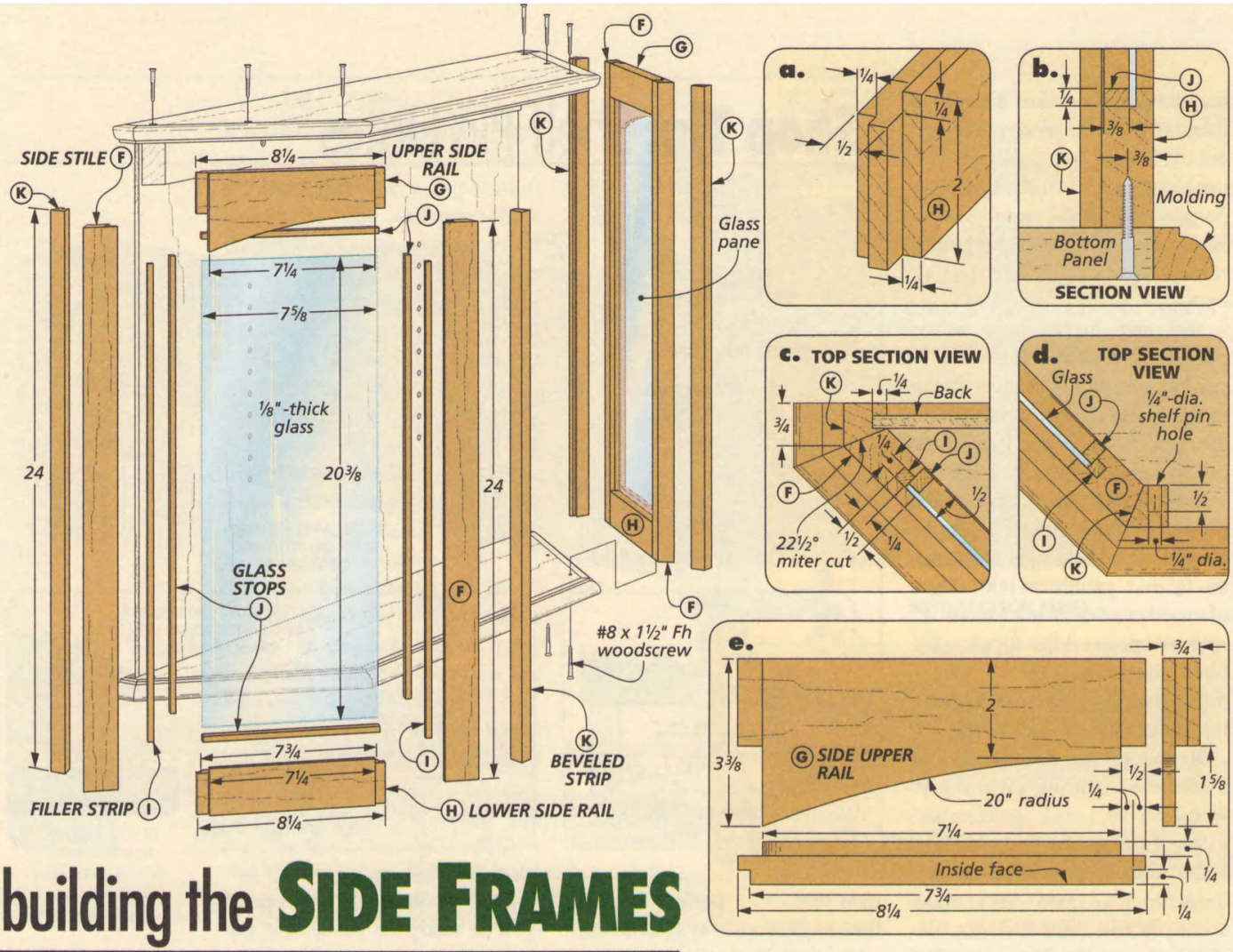

building the SIDE FRAMES

Adding a pair of side frames and four beveled strips makes the basic case rigid and provides a solid framework for mounting the doors. The frames feature arched upper rails and glass panels. To create a strong frame, I used a modified version of stub tenon and groove joinery. You'll find all the details in the drawings above. I'll explain how it all works, starting with the stiles.

CUTTING A GROOVE. Whenever I make this type of frame, I like to start by cutting the grooves. It's easier to match the thickness of the tenons to the groove than the other way around.

After cutting the stiles to final size, the How-To box below shows how to cut the centered grooves in each piece. Then just trim the inside edge to form a recess for the glass panel, as you can see in the right drawing below.

As I said earlier, there are a few aspects of the side frames that require special attention. The illustrations on the next page will help make everything clear.

RAIL TENONS. You can start by cutting the upper and lower side rails to final size. The upper rail starts out wider so you can cut the arched shape later.

Figure 1 shows how I cut the stub tenons on the ends of the rails. Because you trimmed off the back of the stile to form a recess for the glass, the tenon shoulders on the rails need to be offset to fit the stiles. Details 'a' and 'c' above show what this looks like.

How-To: Cutting Stile Grooves

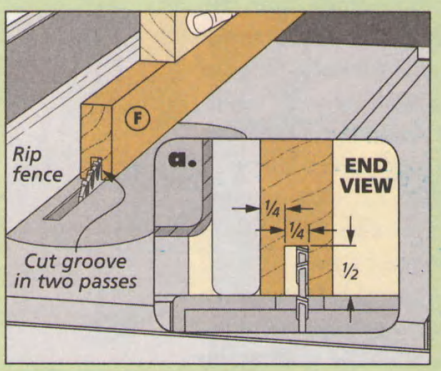

Centered Groove. *Start with the workpiece slightly off center and make the first cut, then flip it end-for-end and repeat.*

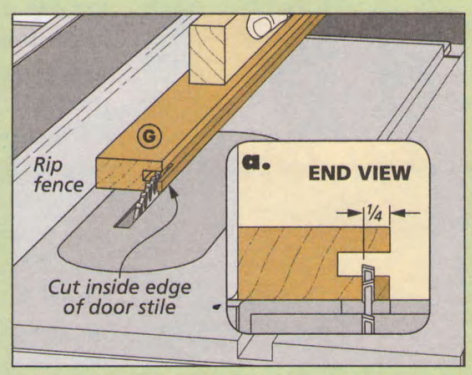

Trimming the Inside Edge. *Cutting away the back, inside edge of the stiles results in a rabbet when the frame is assembled.*

RABBETED RAILS. Next, you can cut the rabbets on the rails (Figures 2 and 3). You'll cut a wide rabbet on the upper rail. This allows you to fit the glass panel inside the frame without having to cut it to match the curve of the rail.

Now lay out the 20"-radius arc on the upper rails and cut it to shape at the band saw or with a jig saw. A little sanding to smooth the curves and you're done.

ASSEMBLY. The joinery helps keep the parts aligned and square during assembly. But it's still a good idea to check the overall assembly to make sure it's square as you add the clamps.

While the glue dried, I ripped some filler strips (details 'c' and 'd', opposite page). These fill in the grooves in the stiles between the rails. Once again, I made a couple test cuts to zero in on a snug fit. After cutting each to final length, I installed them with just a little glue in the grooves.

BEVELS & BEVEL STRIPS. The next step is to bevel the edges of the frames (Figure 5). Then you can get to work on the beveled strips that are attached to the edges of each frame. Both pairs of strips are cut from the edges of extra-wide blanks but they require some work before ripping them to final size (Figures 6 and 7).

The front strip serves as a hinge mounting strip for the doors. It also has holes drilled for shelf pins (Figure 6). The back strip has a groove to hold the plywood back of the cabinet, as shown in Figure 8. I used tape as a clamp to attach the beveled strips to the frames.

INSTALL THE GLASS. I found it easier to install the glass now, before assembling the case. Thin strips serve as glass stop. They're fastened with a few drops of glue to make them easy to remove if the glass ever needs replaced.

CASE ASSEMBLY. To assemble the case, I fastened the sides to the bottom, slid the back in place, and then attached the hanging cleat. Cap it off by fastening the top panel with screws.

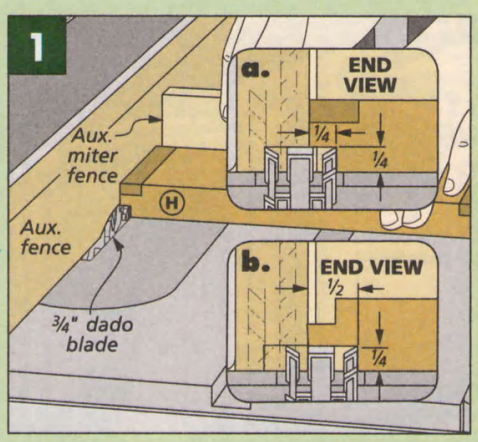

Stub Tenons. *Cut the short cheeks of the tenon first (detail 'a'), then reposition the rip fence to cut the long cheek (detail 'b').*

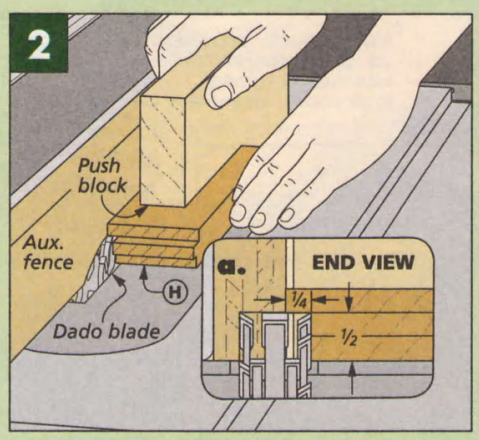

Lower Rail Rabbets. *The rabbets in the lower rails are straightforward cuts using the dado blade and auxiliary fence.*

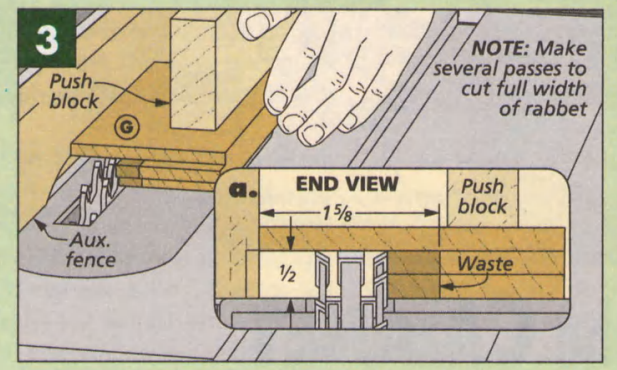

Upper Rails. *Cut the wide rabbets on the upper rails using the same table saw setup. Use a push block and make a series of narrow cuts to remove the waste.*

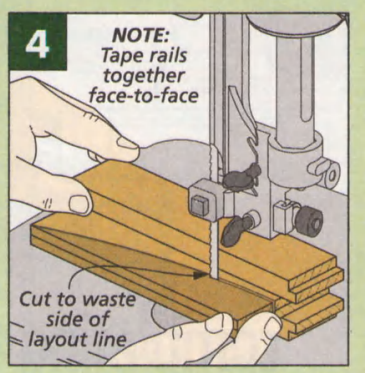

Upper Rail Arcs. *Cut the arc in the rails at the band saw and sand the surfaces smooth.*

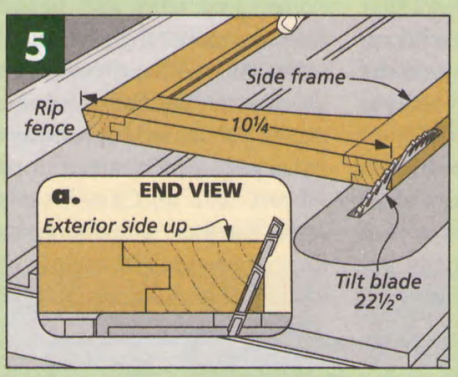

Edge Bevels. *After assembling the frames and cleaning up glue squeezeout, rip the bevels on each edge by tilting the blade.*

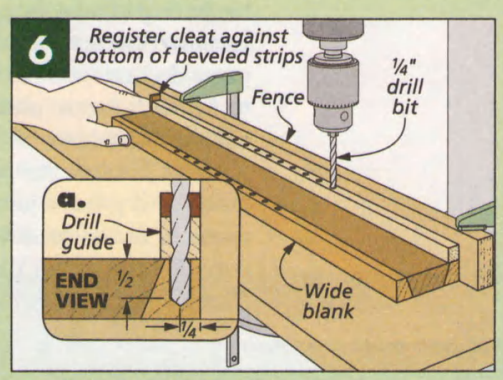

Shelf Pin Holes. *The drilling guide is referenced against the bottom edge of the blank to make sure of a consistent alignment.*

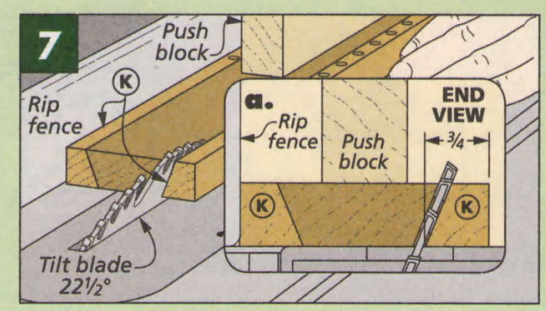

Front Beveled Strips. *After drilling the shelf pin holes, rip the strips from the blank using the same blade angle to match the frames.*

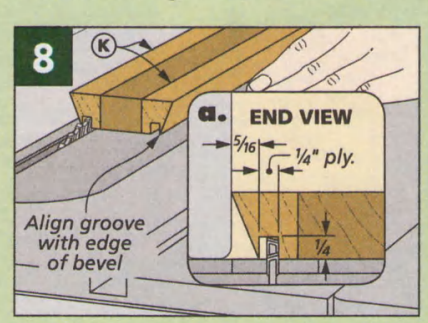

Rear Beveled Strips. *You'll need to cut a groove to fit the plywood back before ripping the rear strips to width.*

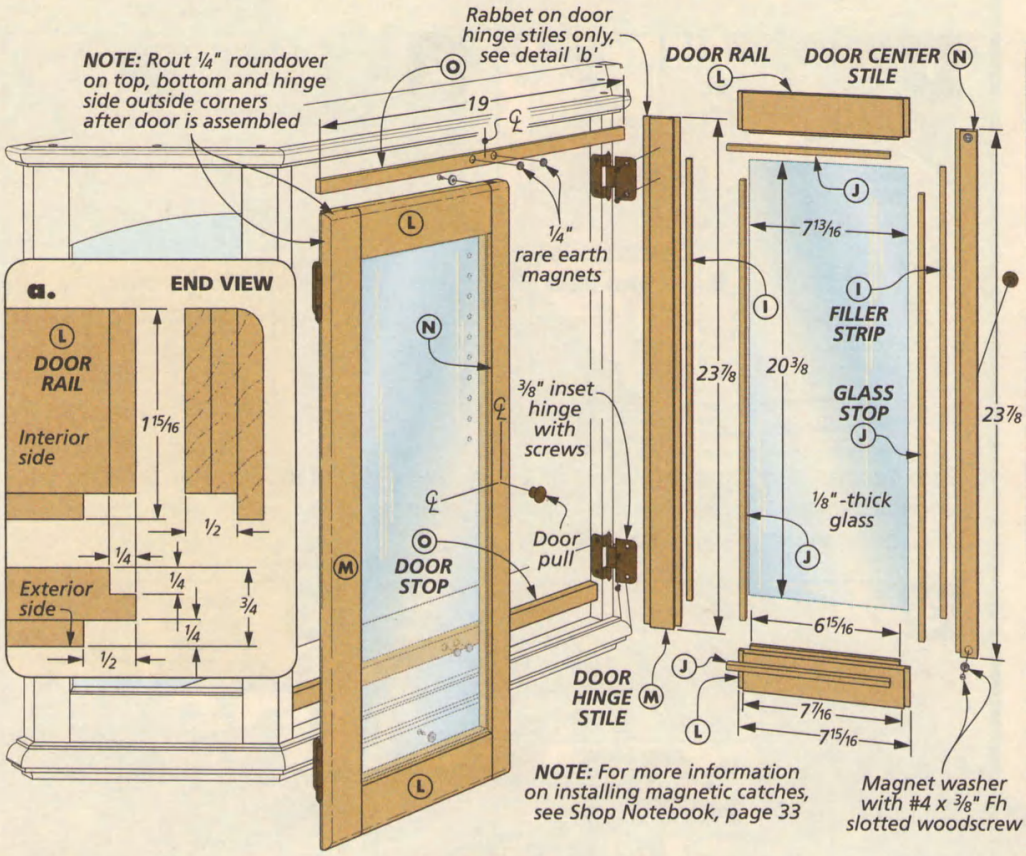

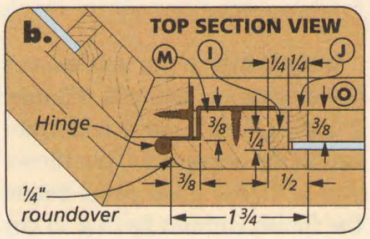

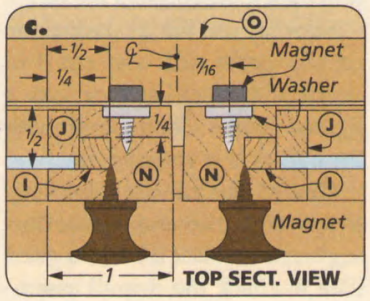

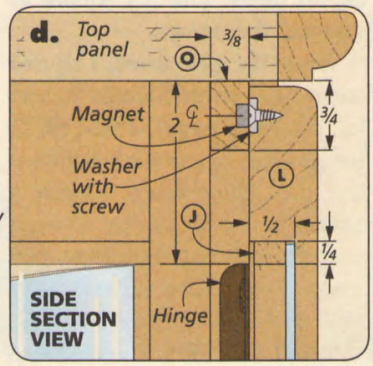

completing the CABINET

At this point, the cabinet is really beginning to take shape. All that remains now is to add the doors, some decorative molding on the top and bottom, and the two adjustable shelves.

DOORS. I used the same stub tenon and groove joinery technique to make the doors as was used for the sides. You can get started by cutting the rails and stiles to final size. (Note that the center door stiles are narrower than the outer, hinge stiles.)

GROOVES. Next, cut the centered grooves in the rails and stiles. Again, you'll need to cut away the inner edge of the rails to form a rabbet (detail 'a'). Likewise, on the stiles, the inner edge is cut back to accommodate the glass stop (details 'b' and 'c,' above).

TENONS. As before, I used the miter gauge to cut the offset stub tenons on the door rails. Test cuts on scrap pieces can help you sneak up on a perfect fit in the grooves in the door stiles.

ASSEMBLY & FINAL SHAPING. Now you can assemble the doors and install the filler strips in the grooves. Head over to the table saw and use a dado blade to cut a rabbet on the inside edge of the hinge stile. This allows the door to be inset 3/8" into the frame. Then, round over the outside edge of the hinge stile as well as the top and bottom of the door frame at the router table. The drawings at left show the details of both operations. Finally, form a slight bevel on the inside edge of each door for clearance when opening and closing the doors (detail 'c').

FINISHING THE DOORS. With the door frames complete, you can install the glass. The process is the same as before. Then you can install the hinges and knobs, as shown in the drawings above. As you

How-To: Profile the Door Edges

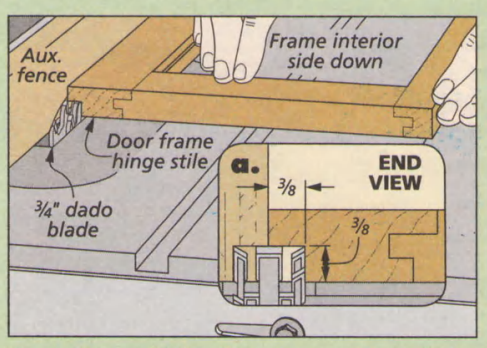

Door Hinge Stile. *To create an inset fit for the doors, rabbet the inside edge of the hinge stile using a dado blade.*

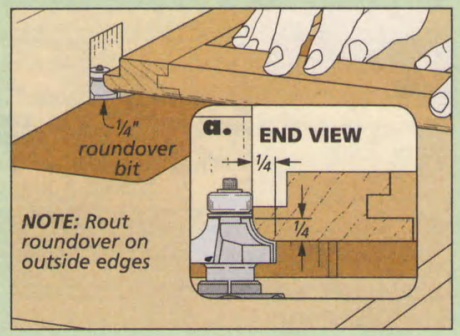

Roundover. *Install a roundover bit in the router table and rout the profile on the top, bottom, and outside edges of the doors.*

can see, the knobs are centered on the length and width of the center door stiles.

DOOR STOPS. I glued door stops to the top and bottom of the case with two rare-earth magnets embedded in each. The position of the magnets matches a pair of washers in the doors (detail 'c,' opposite page). For tips on installing the magnets and washers, turn to Shop Notebook, page 33.

COVE MOLDING. The cove molding installed on the top and bottom adds an attractive look to the cabinet. To make the cove molding, rout a ½" cove on the edge of a wide blank, as shown in detail 'a.' Then miter the pieces to length and glue them in place. Details 'b' and 'c' show the position of the molding.

TOP MOLDING. The top is completed with the addition of a top molding. For this, you just need to rout a ⅛"-rad. roundover on the two outside edges of a molding blank. Then you can install it as before, mitering the pieces to length and gluing them in place.

SHELVES. The two shelves are cut to size from ½"-thick stock. The ends are beveled at 45° and a ⅛" roundover is routed on all edges. The shelves rest on ¼" shelf pins that fit into the holes you drilled earlier in the back and sides.

After applying a finish to the cabinet, you're ready to hang it. For this, drive long screws through the hanging cleat and into a couple of wall studs. W

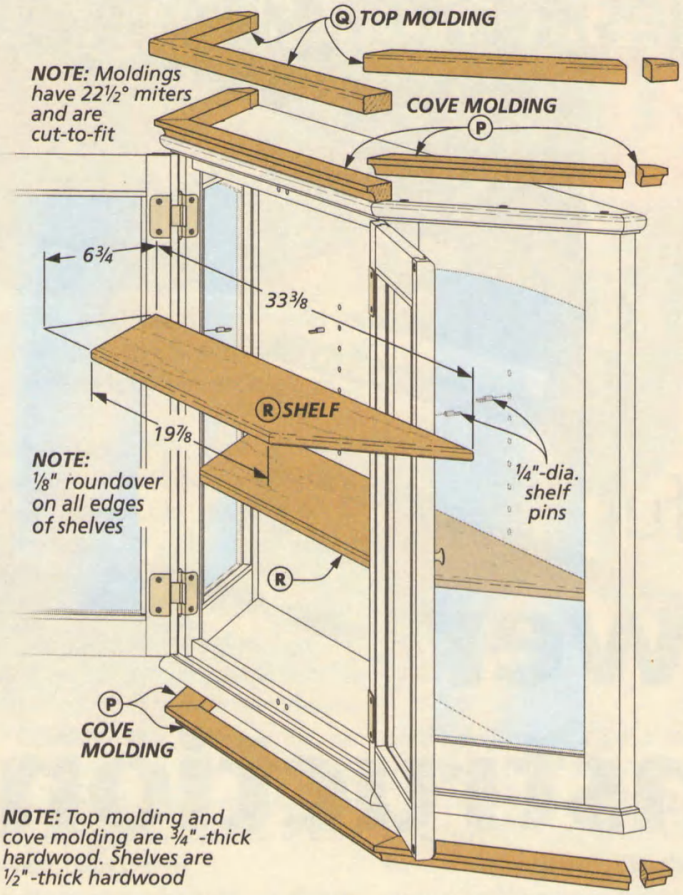

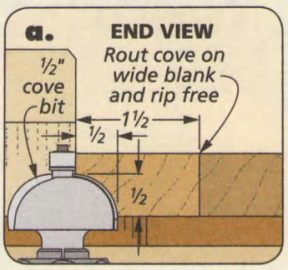

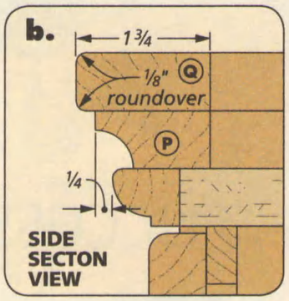

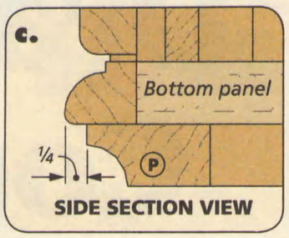

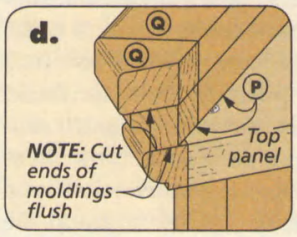

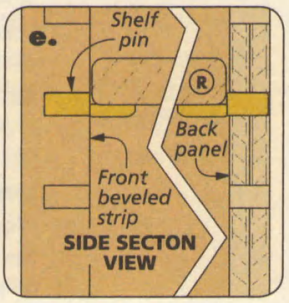

Materials, Supplies & Cutting Diagram

A	Top/Bottom Panels (2)	¾ ply. - 8 x 35
B	Thumbnail Molding (1)	¾ x ⅞ - 90 rgh.
C	Back (1)	¼ ply. - 34 x 25
D	Shelf Pin Strips (2)	¼ ply. - 2 x 24
E	Hanging Cleat (1)	¾ x 2 - 33½
F	Side Stiles (4)	¾ x 1½ - 24
G	Upper Side Rails (2)	¾ x 3⅜ - 8¼
H	Lower Side Rails (2)	¾ x 2 - 8¼
I	Filler Strip (1)	¼ x ¼ - 16' rgh.
J	Glass Stop (1)	¼ x 13/32 - 21' rgh.
K	Beveled Strips (4)	¾ x ¾ - 24
L	Door Rails (4)	¾ x 1 15/16 - 7 15/16
M	Door Hinge Stile (2)	¾ x 1¾ - 23⅞
N	Door Center Stile (2)	¾ x 1 - 23⅞
O	Door Stop (2)	⅜ x ¾ - 19
P	Cove Molding (1)	¾ x 1½ - 96 rgh.
Q	Top Molding (1)	¾ x 1¾ - 50 rgh.
R	Shelves (2)	½ x 6¾ - 33⅜

- (2 pr.) ⅜" Inset Hinges w/Screws
- (4) ¼" Rare-Earth Magnets & Washers
- (2) Door Pulls
- (8) ¼"-dia. Shelf Pins
- (12) #8 x 1½" Fh Woodscrews
- (8) #4 x ½" Fh Woodscrews
- (2) 7⅝" x 20⅜" Glass Panels (⅛" thick)
- (2) 7 13/16" x 20⅜" Glass Panels (⅛" thick)

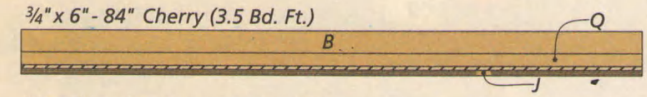

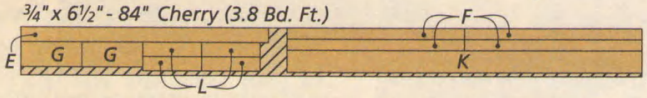

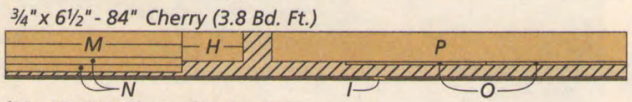

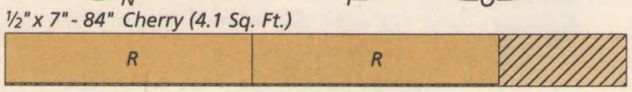

ALSO NEEDED: *One 48"x 48" Sheet of ¼" Cherry Plywood*
One 24"x 48" Sheet of ¾" Cherry Plywood

NOTE: *Parts B, K, and P, cut from extra wide blanks.*

successful Drawer Construction

When you get ready to build the drawers for a project, the first thing that comes to mind is the type of joinery you'll use. You have options as varied as classic, hand-cut dovetails to much simpler tongue and dado construction. But no matter what type of joinery you use to build the drawers, there are a lot of other factors that are just as important to achieving top-quality results.

I've put together a few guidelines that apply to all drawer construction — just common sense points I always keep in mind.

START WITH A PLAN. Whether you've designed your own project or you're working from a published plan, it's always a good idea to keep a list of parts at hand. For drawer building, that list should include how many sides, fronts, and backs you'll need and the final sizes of all pieces. Since the sides are often made from thinner stock than the front and back, make sure to list the pieces by thickness as well. This makes selecting stock easier.

SELECT YOUR STOCK. You can make the building process a lot easier by taking your time at the lumberyard. With your parts list or plan in hand, pick through the stacks to find enough straight, flat stock to fill the bill. One simple tip that I can offer is to always pick up 15-20% extra stock for tool setups and to save the day in case of a mistake.

Obviously, if you're planning to use plywood, this is less of a concern. However, if you do choose plywood, it's a good idea to stick to Baltic birch or similarly stable plywood free of voids.

MILL FLAT, SQUARE STOCK. You'll never get a good fit with out-of-square or twisted parts. Since a drawer needs to be not only square but also flat to slide properly, one bad piece can ruin the whole drawer. Don't fool yourself into thinking a piece will straighten out when it's clamped up. Taking the time to joint the workpieces flat on one face and then planing them to a uniform thickness is the first step in successful drawer construction (left drawing).

RIP TO WIDTH. Another good habit to get into is to rip all pieces of the same width with the same setup. In other words, set the rip fence of your table saw and use your parts list to rip enough stock to get all the pieces of that width

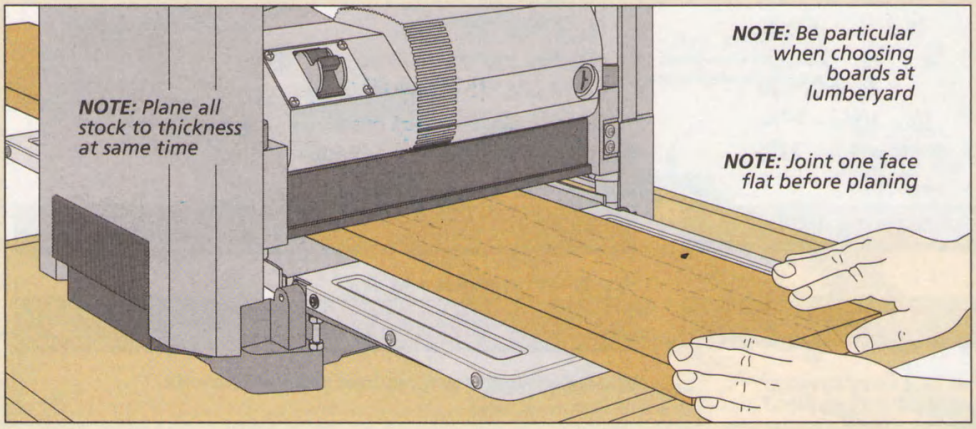

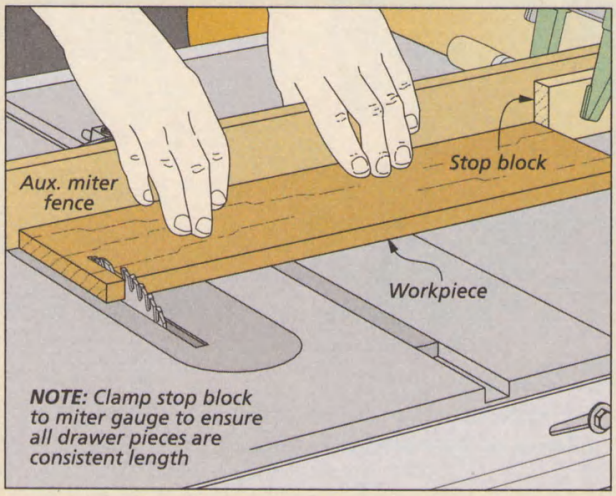

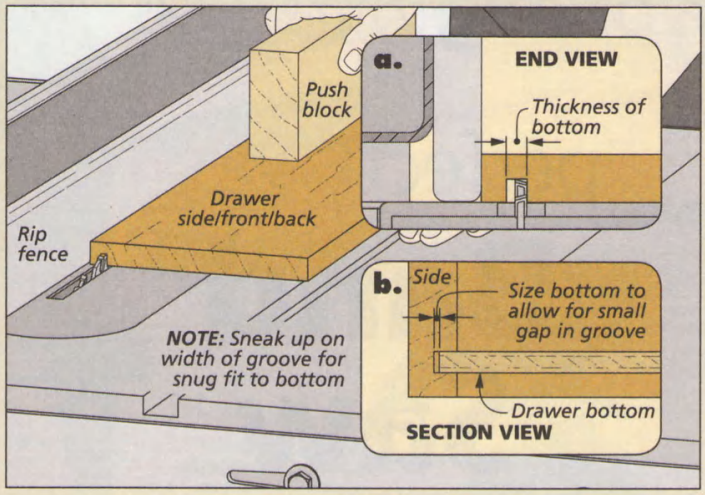

at one time. You'd be surprised how much variation you can get if you have to go back later to cut more stock to size.

ACCURATE LENGTH. No matter how careful you've been up to this point, if your sides aren't exactly the same length, you won't get a square drawer. The same is true for the fronts and backs. The best way to ensure this is to use a stop block when cutting the pieces to length (left drawing above). A scrap clamped to an auxiliary miter gauge fence is all you need.

MATCH & MARK STOCK. With the workpieces milled and sized, the next step is to lay out the pieces for each individual drawer. One important consideration is to get a nice look for the drawer fronts since they're often the highlight of the project. Whether the fronts are real or false, they should have a consistent grain pattern and good color match. This is less of a concern with the sides and the backs. But again, try to shoot for the best possible look.

Once you have the parts laid out and matched up, always label them clearly to avoid any chance of confusion when cutting the joinery. The Shop Tip below offers a quick, foolproof method of marking drawer parts.

DRAWER BOTTOMS. And when cutting the grooves for drawer bottoms in the parts, once again, make all the cuts using the same table saw setup. This makes it easier to size the grooves for a consistently snug fit to the bottom (right drawing above). However, it shouldn't be too tight. Then, to ensure a trouble-free assembly, size the drawer bottoms to allow for a small gap (1/32") at the bottom of the grooves.

ASSEMBLY. After clamping, set the drawer on a perfectly flat surface (the table saw or a flat piece of MDF on the benchtop) to make sure there's no twist in the glueup. It should sit flat without rocking. Finally, remember to check each drawer for square.

If you get in the habit of always following these simple tips when building drawers, you're sure to get top-notch results. And nothing highlights the quality of a project like attractive, smooth-working drawers. W

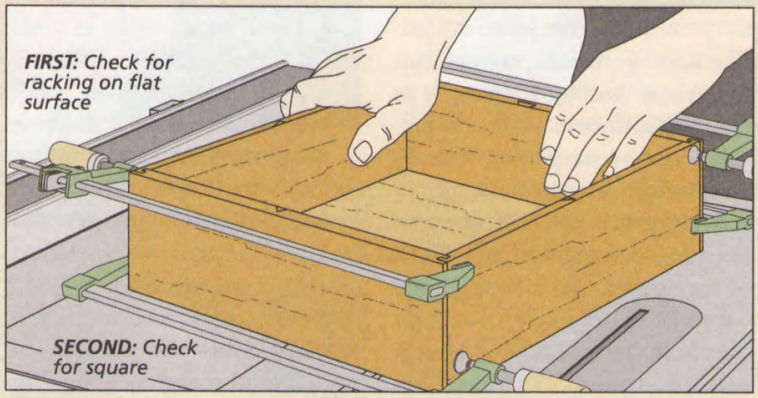

Shop Tip: Triangle Method

I've used this simple method for marking drawer parts for many years. It relies on triangles marked across the paired sides and front and back to tell you everything you need to know (photo at right).

The two sides are placed side-by-side and then a triangle is drawn across the top edge pointing forward. This tells you that the marked edge is the top, the open side of the marking on each piece is the inside, and the angled leg points to the front. The front and back are paired and similarly marked with the triangle also pointing forward.

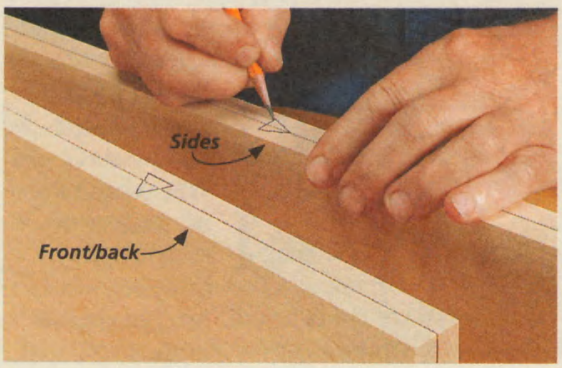

perfect Band Saw Cuts

Attention to a few easy-to-master details guarantees accurate cuts.

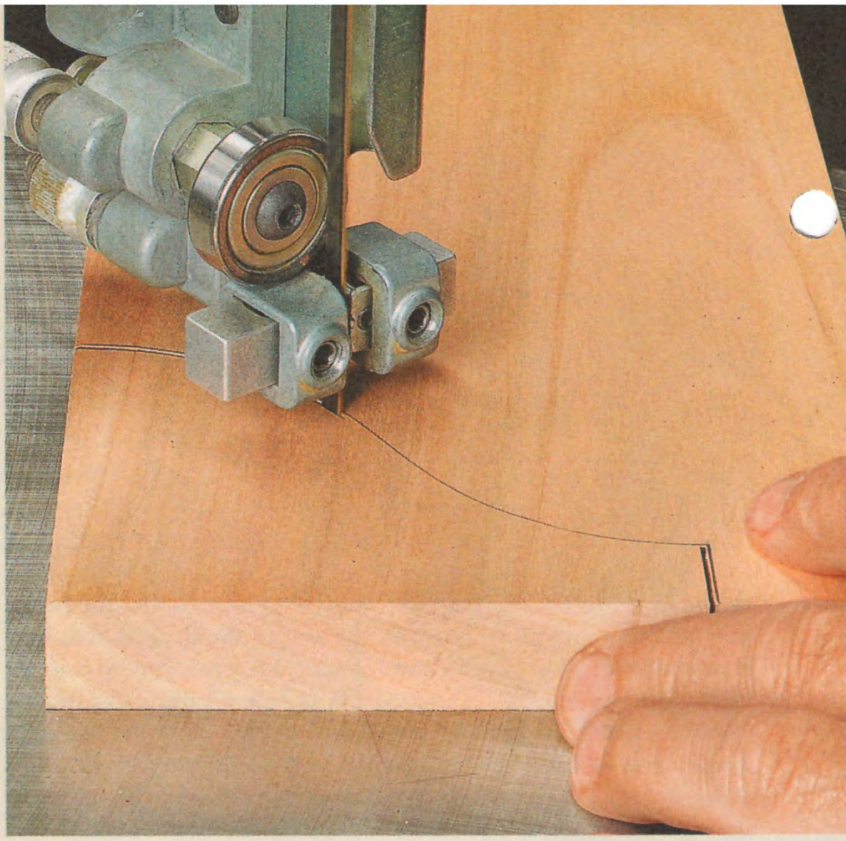

During construction of a project, more often than not, I make at least one trip to the band saw. Usually this involves cutting a part to shape "free-hand." By this, I mean simply cutting to a layout line without the aid of a fence or other type of guide. This is essentially what the band saw is designed to do. The task can be as simple as making a straight taper cut or something more involved like shaping a complex profile.

The catch is that good results are not automatic. Inaccurate cuts with rough, burned edges can force you to perform a lot of tedious cleanup on the workpiece with a file, sandpaper, or sanding drum. But a poor result usually stems from a hasty setup and execution. All it takes is a little planning and the right approach to get clean, precise cuts.

SET UP THE SAW

The starting point is proper setup of the saw. And the first step is to choose the right blade for the job. There are two aspects to this — blade width and tooth count.

BLADE WIDTH. When cutting a profile, you need to match the width of the blade to the contour of the curve. In a nutshell, the narrower the blade, the tighter the radius it will cut. A blade that's too wide may not allow for the turns necessary to follow a layout line. On the other hand, very narrow blades tend to flex and can be difficult to keep on track.

Your best bet is to choose the widest blade that will still allow you to easily follow the layout line. The Shop Tip at left provides a handy turning radius reference.

TOOTH COUNT. Choosing a blade with the right tooth count involves a balance. More teeth creates a smooth surface but a slow cut. A slow feed may cause burning while the tendency to force the cut makes steering difficult. As is often the case, the middle ground is the best place to be. For general use, a ¼"-wide blade with 6 teeth per inch works well.

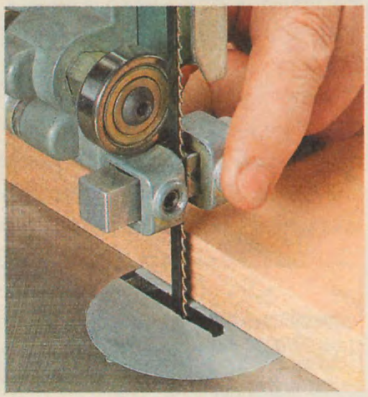

▲ Position the saw's guides close to the workpiece for the best blade support.

GUIDES. Setting the height of the blade guides correctly is the second component of the setup. The guides should be as close to the surface of the workpiece as possible without blocking your view of the layout line (lower photo above). This helps minimize blade vibration and deflection.

Shop Tip: Blade Width

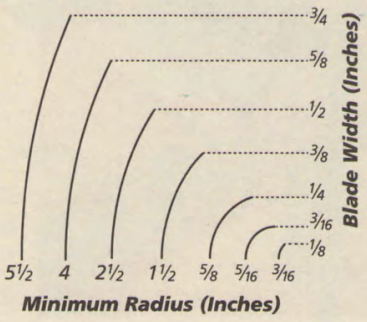

As shown at left, a blade's tightest turning radius depends on its width. When matching the blade width to the profile being cut, it's best not to push the limits.

THINK AHEAD

Once the setup is complete, don't be in a rush to start the cuts. Sometimes a little planning can actually help get the job done quicker and easier. Let me offer some food for thought.

First, when marking a profile on a workpiece, try to keep the layout lines 1/8" or more back from any edge (lower left drawing). The goal is to prevent the blade from breaking through the edge during the cut. A continuous cut in which the blade is always fully engaged will be much smoother.

THE FIRST CUT. When cutting a complex profile with multiple, intersecting curves, plan the order of the cuts in advance. If possible, you want to cut each separate section of the profile with a single cut. The drawing above illustrates this idea. The first cuts are simply relief cuts that allow the waste to be removed more easily.

You may also need to consider the best place to start a cut. Generally, it's easier to enter a cut at a steep angle (closer to 90°) rather than a shallow angle. At a very shallow angle the blade wants to skip along the edge. So when cutting a straight taper, enter from the end of the workpiece, as shown in the right drawing.

WATCH THE FRAME. Always remember that the saw has a frame that may obstruct completion of a cut. Running into the frame can be a problem when cutting profiles on longer workpieces. Think about which starting point will allow you to avoid the frame.

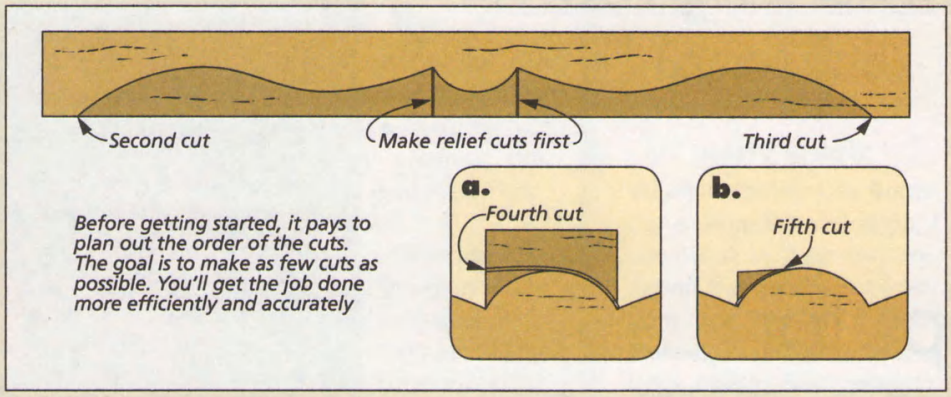

Before getting started, it pays to plan out the order of the cuts. The goal is to make as few cuts as possible. You'll get the job done more efficiently and accurately

In some instances, you may need to flip the workpiece and mark the layout on the opposite face.

MAKING THE CUTS

Now that you're ready to start a cut, you have to ask, "how close to the layout line do I want to be?" If the saw is set up properly — the right blade and guide setting — you should be able to cut within about 1/32" of the line without fear of crossing over (right drawing below). This will leave you with a minimum of cleanup after the cut is completed.

SLOW & STEADY. A slow, steady feed rate makes it easier to follow a layout line. Avoid forcing the cut. You'll end up sacrificing control. However, to avoid burning and "hiccups" in the cut, always keep the workpiece moving.

I like to focus my eyes on the layout line just ahead of the point of the cut. This allows you to anticipate changes in direction and you'll be able to steer more easily and accurately.

TWO HANDS. I'm right-handed so I usually feed and control the workpiece with my dominant hand while using my left to guide it. You'll find that a light, sensitive touch with your guide hand produces the best result.

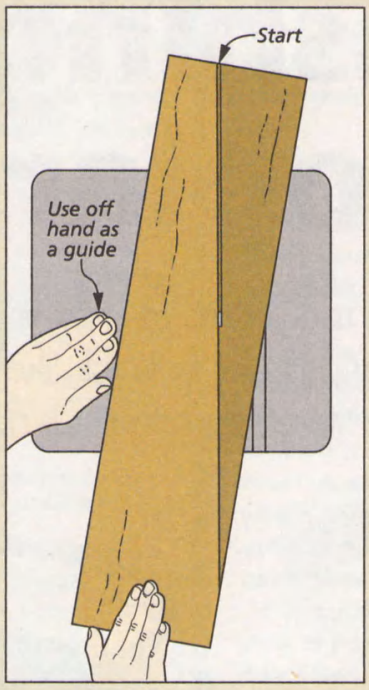

When making a straight cut, you can often use your guide hand as a rub fence. Place the thumb and index finger along the edge of the workpiece and use them to gently steer (drawing above). You'll find it's much easier to track a straight line.

ONE WAY. Sometimes it's necessary to back up at the end of a cut, but try to limit this. You'll usually score or burn the smooth surface. Back up just enough to exit the cut by removing a section of waste (far left drawing).

The only difficult thing here is remembering to slow down and take your time. This will end in a better result from less effort. W

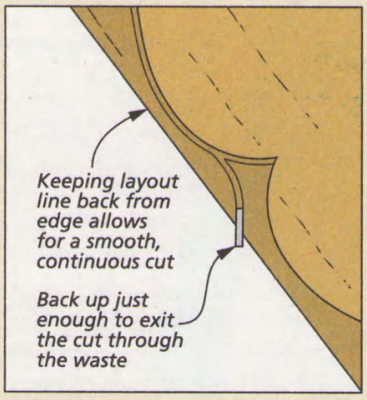

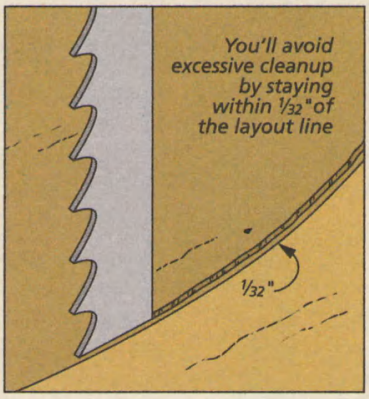

tips for Finishing Poplar

Here's the secret to making this low-cost wood look like its expensive cousin.

▲ Fine-grained poplar is available in a variety of sizes at home centers and lumberyards.

When I build a big project, like an entertainment center or a bed, one of my first concerns is the cost of lumber. The board feet can really stack up on a project like that and if you use high-quality hardwood like cherry or walnut, the cost will add up too.

One way to save some money and still have a quality finished piece is to use a less-expensive wood like poplar. Poplar can be almost half the price of other premium hardwoods. It's stable and it machines well, making it easy to work with in the shop. Plus, the species has a fine, even grain with virtually no knots.

There's a downside to poplar, though. It can have heavy streaks and color variations that appear dark green to pale yellow, so most woodworkers have banished it to the unseen parts of projects, like drawer sides or web frames. But the wood can be painted or stained with great results. You can see examples of both in the main photo and the lower photo on the opposite page.

PAINT. The old saying "Paint covers a multitude of sins," was probably spoken first about poplar.

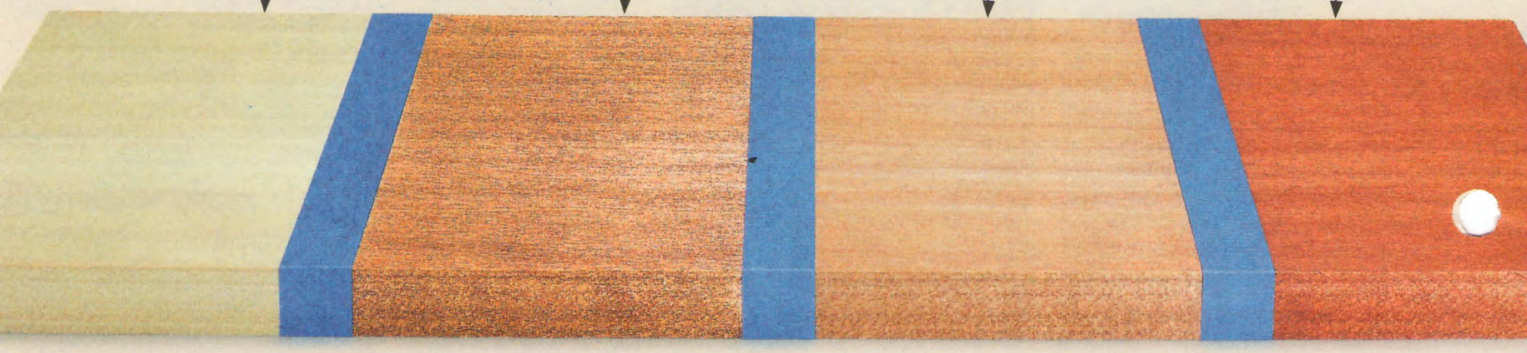

This wood takes paint (oil-based or latex) extremely well. While paint looks good on poplar, you can make it look like more expensive, fine-grained woods. It just takes a particular type of stain.

OIL STAIN. Oil-based stains are very popular for most hardwoods because they help highlight the figure. But poplar can absorb stain inconsistently. This means you could end up with a project that looks blotchy, like the sample you see at the bottom of the opposite page.

CONDITIONER. If you prefer to work with oil stain, there is a solution to the blotchiness. You can apply a wood conditioner to the bare wood before you apply the stain. Most conditioners are a thinned varnish that seals the wood grain and gives you a more consistent surface on which to apply the stain. But there's a trade off in the process. As you can see in the photo on the opposite page, the conditioned wood is a lot lighter in color than the other finished surfaces. The process of sealing the wood also keeps the stain from penetrating. That's why I like to use gel stain.

GEL STAINS. Gel stains are exactly what the name implies: Mineral spirits and resin mixed with colorant to produce a thick gel.

If you've never used gel stain before, you'll be surprised when you open the can. It's about the consistency of mayonnaise (margin photo). Although it's oil based, a thickener in the stain gives it body. The resin keeps the color on the surface of the wood, but it's translucent. You'll see the wood grain, but not the original color of the wood.

Once you apply the gel, you'll immediately see the intensity of the color. It only takes one coat to get a rich, deep color on poplar. I like to use red gel stain for a project that looks like it's built from cherry without the expense of the finer wood. Dark brown stain works great to create the look of walnut. As with any stain, there is a wide selection of colors, so varied looks are easy to achieve.

▲ A gel stain looks almost like paint, but is transluscent. It dries to a rich, deep color that hides the greenish tint of poplar.

To apply gel stain, I use a clean cloth with a healthy amount of stain on it (margin photo). As you apply the stain, you may notice streaks. These can be removed with a clean cloth while the stain is still wet. Apply the stain with a circular motion for maximum coverage. Then wipe with the grain to remove the excess stain and produce an even color. After the stain dries (about 8 hours) you can add your favorite topcoat.

You can apply a second coat of stain before the topcoat for a richer look. But I think you'll find that one coat of gel stain is all it takes to turn an ugly-duckling piece of hardwood into a striking, finished project. W

▲ The smooth texture and fine, clear grain make poplar a great choice for any project that will be painted. It accepts both oil-based and latex paint equally well.

Setting Construction Goals

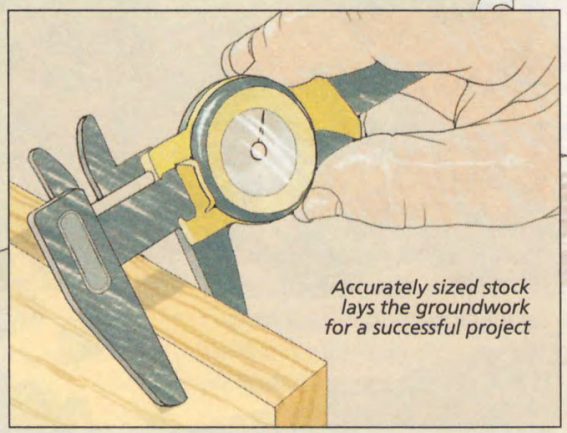

Accurately sized stock lays the groundwork for a successful project

It's the little things that make the difference. The key to building a top-notch project is attention to a few simple details.

One of the most enjoyable aspects of the hobby of woodworking is that in most respects, it's entirely an individual pursuit. You're in control. You can build the projects you want to build, using the tools and techniques you're comfortable with, and do the work at your own pace. And maybe most important of all, you get to set the goals and standards for the quality of the end result.

However, sometimes this last aspect can be a challenge. When building a project, you have to decide — How good is good enough? To be honest, after many years of woodworking, I still sometimes struggle to find the right balance between my desire for a perfect outcome and the constraints of time and effort. It almost always comes down to a compromise. But the good news is that arriving at a happy medium isn't very difficult.

STRUCTURE, FUNCTION, & APPEARANCE. I approach every project with three general criteria in mind. First, a project should be structurally sound. Next, it needs to serve the function for which it was intended. Finally, I want every project I build to look good. You can't completely separate these three goals. Although each has its own criteria, they all come together in the final result.

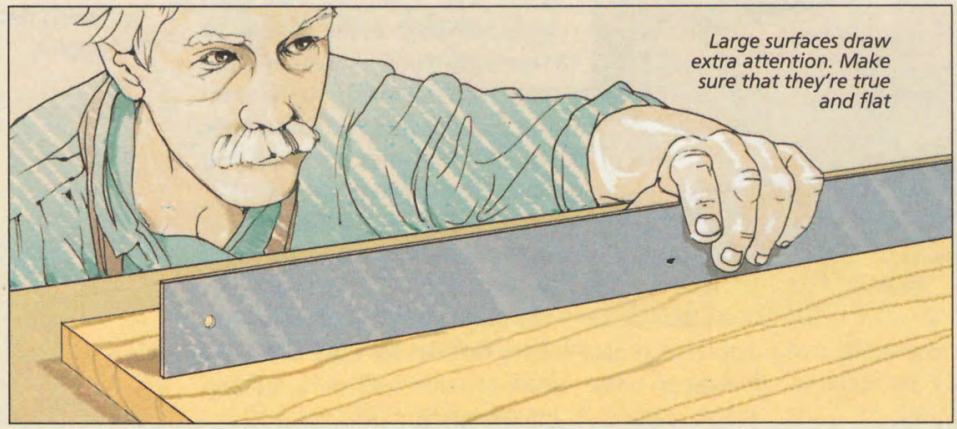

Large surfaces draw extra attention. Make sure that they're true and flat

A GOOD DESIGN. It all begins with a good design. As the saying goes, "You can't make a silk purse out of a sow's ear." You won't meet any of your goals unless the design is thoroughly hashed out beforehand and all the details are thought through. And having a good design even extends to careful wood selection.

However, once the design is set and meets the structural, functional, and appearance standards you've laid out, the quality of the end product depends on the work you do in the shop.

DON'T OBSESS. When doing the actual building — cutting, fitting,

and assembling the parts — I like to think I'll achieve perfection at each step along the way. But in reality, I know that this is an impossible standard. So I don't obsess on this unrealistic goal. Instead, I focus on doing the best job that I can at each step along the way. Then I move on, putting thoughts of any minor imperfections aside. In other words, focus on the specific task at hand, but don't lose sight of the big picture. You'll find that if you adopt this practical attitude, chances are that the final product will turn out pretty darn good.

DON'T OVERLOOK. On the other hand, it's best not to let serious problems slide. Major shortcomings will only come back to bite you later on in the building process, and can compromise the end result. So when it's practical, correct these errors on the spot. If it's something that can't be fixed, keep in mind that you may need to adapt or compensate at a later point in the construction.

A WELL-BUILT PROJECT

The quality control aspects that I try to focus on when building can be condensed into a short and straightforward list. It all starts with accurately sized parts. Even small dimensioning errors have a way of compounding through the course of a project. So it's best to adopt the attitude that close is definitely *not* good enough.

GAP FREE & SQUARE. As well as being important structurally, the fit of the joints is one of the most noticeable aspects of a project. Gaps, heavy glue lines, or misaligned surfaces can stick out like a sore thumb. So shoot for joinery that's tight and flush. I always rely on a dry run and close inspection before the actual assembly to reveal any problems.

And nothing can be more confounding than having to "work around" an assembly that isn't square. It pays to check and double-check for square before and during the glueup. Then you can make the necessary adjustments rather than trying to compensate after the clamps come off.

A PLEASING EFFECT. Moldings are meant to draw attention and can help make or break the appearance of a project. For the best effect, make sure the joints fit tightly and the pieces are aligned properly (lower left drawing). Extra care taken here really makes a difference.

SMOOTH, FLAT & CONSISTENT. Surfacing (sanding, scraping, or planing) parts and assemblies is not my idea of a fun day in the shop. However, it's definitely not a place to cut corners.

I try to make sure that all large exposed surfaces are dead flat and smooth (lower drawing, opposite page). All the parts should be surfaced consistently (sanded to the same grit) and free of visible machine marks. A little extra sanding up front will pay off when the finish goes on.

But don't get carried away. Careful, controlled sanding is the key. Edges and profiles that are kept crisp and then softly eased look much nicer (right drawing).

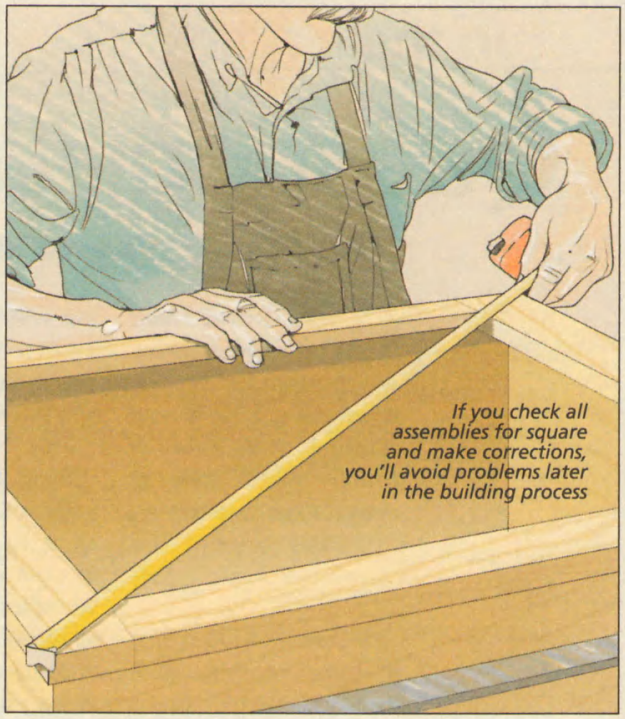

If you check all assemblies for square and make corrections, you'll avoid problems later in the building process

DOORS & DRAWERS. When it comes to the fit of doors and drawers, I try to be very particular. Make sure the gaps are even and surfaces and edges align properly. All it takes is a little extra attention at the time of assembly to avoid racked doors and drawers.

Along the same lines, you want doors, drawers, table leaves, or other moving parts to operate smoothly and easily. Careful fitting and adjustment is the key.

The fact is, nothing here requires great skill. But when practiced together, the end result is fine craftsmanship. W

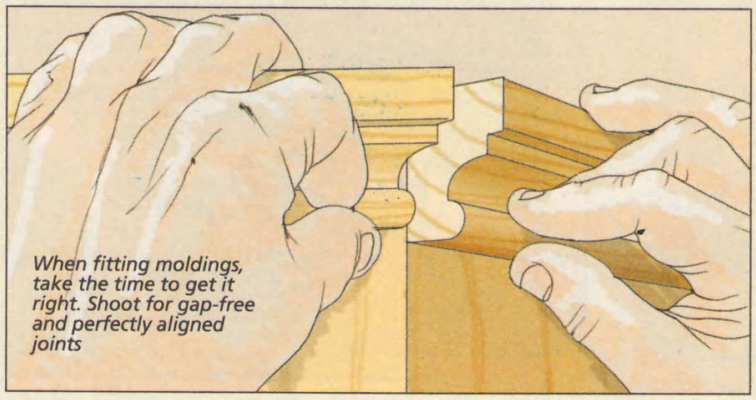

When fitting moldings, take the time to get it right. Shoot for gap-free and perfectly aligned joints

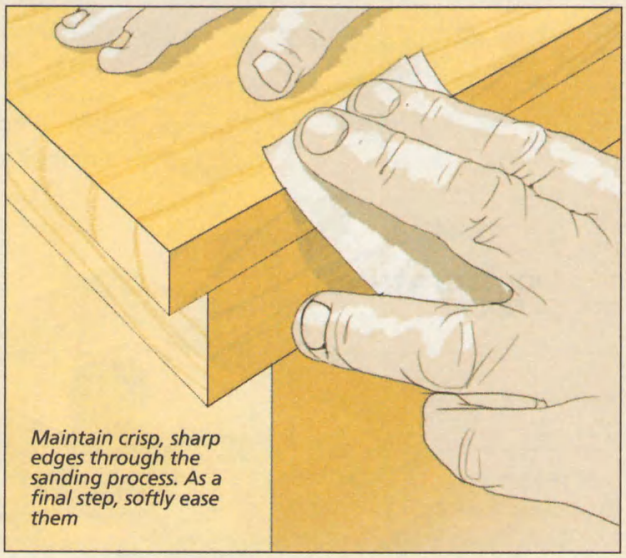

Maintain crisp, sharp edges through the sanding process. As a final step, softly ease them

Questions & Answers

The Right Way to Rout

Q ***I always have a hard time remembering which direction to rout when using a hand-held router. Is there a rule of thumb you follow, or does it even matter?***

Rafael Burgos-Mirabal
Cambridge, Massachusetts

A Determining which way to rout often causes some head scratching, especially when setting up for a routing procedure that's a little out of the ordinary.

As a rule, when using a hand-held router, you want to avoid routing in the same direction that the bit is spinning. If you don't, the router has a tendency to take off as soon as the bit contacts the workpiece. By routing in a direction against the rotation of the bit, you have more control.

This means that when routing a profile on the edge of a board, you want to rout from left to right as you face the workpiece. An easy way to remember this is that you should rout in the same direction that you read — from left to right.

DADOES & GROOVES. But there are some cases where it's a little more confusing. Routing a dado or groove with a fence to guide the router is one example.

At first glance, it wouldn't seem that the routing direction makes much difference since you're routing against a fence. But if you rout in the wrong direction, the rotation of the bit will pull the router off course and away from the fence.

So you still want to rout from left to right, but only if the fence is behind the router, like you see in the upper left drawing below.

If you're using two fences to rout both sides of a dado or groove, then you'll need to rout in a U-shape pattern, first along one fence and then in the opposite direction along the other (upper right).

FRAMES. Routing around the edges of a frame is another example. As you can see in the lower left drawing below, when routing the outside of the frame, you want to rout in a counter-clockwise direction. But when routing the inside of the frame, you'll want to rout in the opposite direction (clockwise).

RULE OF THUMB. No matter what it is you're routing, you can see a simple trick I use to jog my memory in the lower right drawing below.

Simply hold out your right hand, palm down, and extend your thumb and index finger. If you hold your thumb against the edge of the workpiece you wish to rout or the fence, your index finger will point you in the right direction. W

ROUTING AGAINST A FENCE

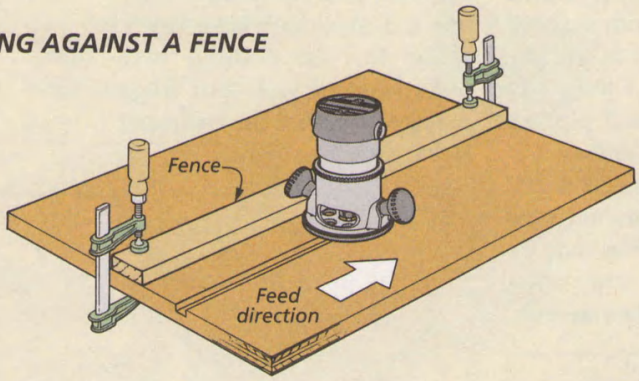

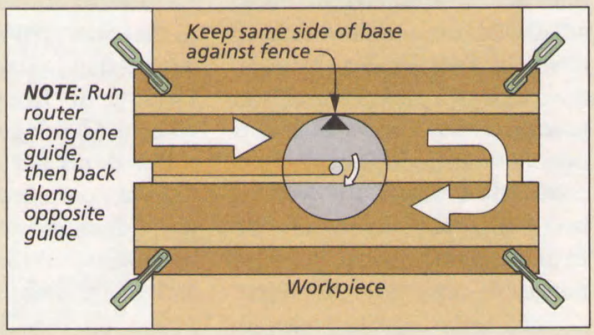

ROUTING AROUND A FRAME

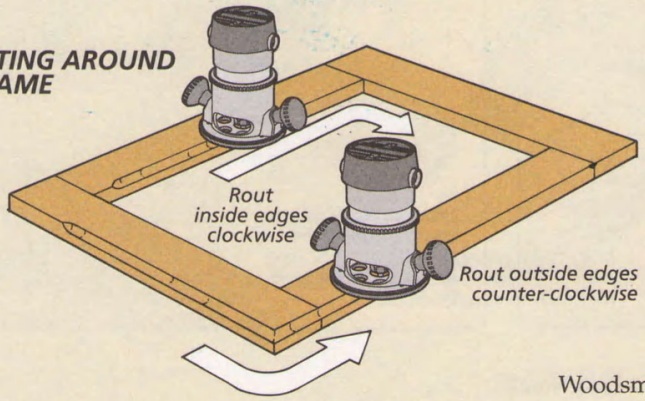

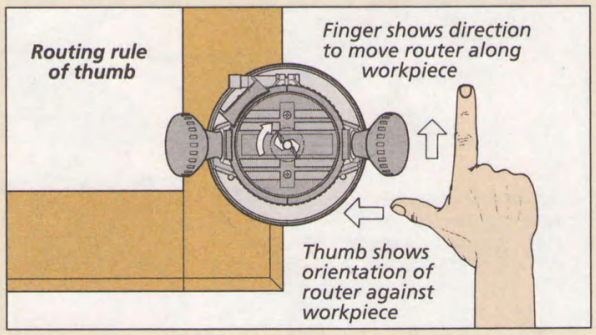

Sources

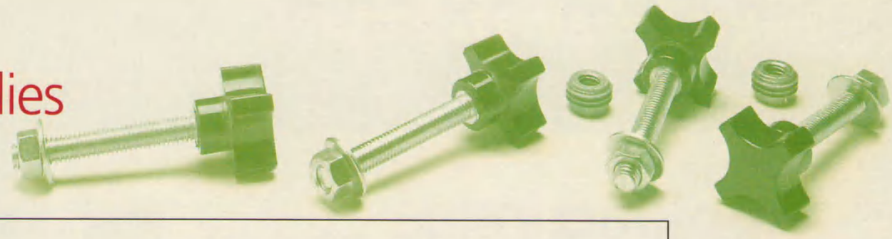

CABINET LIGHTING

There are a multitude of cabinet lighting products available for woodworkers. Many of the lighting fixtures shown in the article on page 8 are available from *Rockler*, as well as other woodworking catalogs.

HAND DRILLS

Whether you're looking for a cordless, corded, or pneumatic drill, you'll find that you have plenty of choices available. Most home centers have a fairly good selection of drills. You can also find a large assortment of drills through online tool merchants such as *Amazon.com*.

TAPER JIG

The *Rockler Taper Jig* featured on page 12 works great for cutting tapers or ripping a straight edge on rough stock. The jig is available through *Rockler* (21597).

VENEERING

Veneering doesn't require a lot of equipment, but it does call for a few specialized tools and supplies, such as a veneer saw, veneer tape, and cold press glue. These items can be purchased through several of the woodworking sources listed in the margin at right.

SERVING TRAY

You won't need any hardware to build the serving tray on page 18. To finish the tray, we applied a coat of *General Finishes' Seal-a-Cell* and then sprayed on two coats of lacquer.

CREDENZA

To build the credenza on page 22, you'll need several hardware items. The drawer slides (02K36.18), inset hinges (00B15.24), and overlay hinges (00B15.20) were all purchased from *Lee Valley*. The spoon-style shelf supports (30437) came from *Rockler*. And the oil-rubbed door and drawer pulls (C8623) were ordered from *Rejuvenation*.

The smoked glass used for the windows in the doors was purchased at a local glass shop. Smoked glass is available in a couple different shades. We used a darker shade.

One of the most striking features of the credenza is the Douglas fir veneer. For this project, we used a man-made, "reconstituted" veneer product from *Certainly Wood*. It's available in large sheets, making it the perfect choice for this project.

For the finish, we applied a coat of *General Finishes' Seal-a-Cell* and then sprayed on two coats of lacquer.

CURIO CABINET

Most of the hardware used on the curio cabinet shown on page 34 came from *Lee Valley*. This includes the inset hinges (00H32.10), brass knobs (01A02.16) and rare-earth magnet sets (99K33.10). The shelf supports (30437) were purchased from *Rockler*.

The cabinet was stained with a mix of three parts *Zar* cherry stain and one part of *WoodKote Jel'd Stain* (cherry). After the stain was dry, the project was finished by spraying on a couple coats of lacquer. W

Online Customer Service

Click on *Customer Service* at
woodsmith.com/magazine

- Access your account status
- Change your mailing or email address
- Pay your bill
- Renew your subscription
- Tell us if you've missed an issue
- Find out if your payment has been received

MAIL ORDER SOURCES

Project supplies may be ordered from the following companies:

Woodsmith Store
800-444-7527
Corded & Cordless Drills, Veneering Supplies

Rockler
800-279-4441
rockler.com
Cabinet Lighting, Shelf Supports, Taper Jig

Amazon.com
Hand Drills

Certainly Wood
716-655-0206
certainlywood.com
Reconstituted Veneer

Constantine's
800-443-9667
constantines.com
Veneering Supplies

Lee Valley
800-871-8158
leevalley.com
Drawer Slides, Inset Hinges, Knobs, Overlay Hinges, Rare-Earth Magnet Sets

Rejuvenation
888-401-1900
rejuvenation.com
Pulls

VeneerSupplies.com
Veneering Supplies

Woodcraft
800-225-1153
woodcraft.com
Cabinet Lighting, Veneering Supplies

Keep it All Organized !

Woodsmith Binders

As you build your *Woodsmith* library, here's a way to keep your issues organized. Each binder features durable vinyl covers and easy-to-read perforated number tags. Snap rings with a quick-open lever make it easy to insert and remove issues. And there's an extra pocket inside for storing notes. Each binder holds a full year (6 issues) of *Woodsmith*.

Visit **Woodsmith.com** to order or call **1-800-444-7527**.

***Woodsmith* Binder**

❍ **WB** *(Holds 6 issues)*.....$12.95

looking inside
Final Details

▲ *Serving Tray.* The splayed, curly maple sides and curved, cocobolo handles combine to give this serving tray a distinctive look. Check out all the construction details beginning on page 18.

▲ *Curio Cabinet.* The glass doors and side panels of this cabinet allow you to show off your collection from just about any angle. Turn to page 34 to find everything you need to build the project.

▼ *Credenza.* At home in just about any room of the house, this sleek cabinet offers plenty of storage. Detailed plans for building it begin on page 22.